

J-series™ Services Router Quick Start

12 October 2007
Part Number: 530-021980-01
Revision 1

J-series Services Routers provide IP routing, WAN and LAN connectivity, and management services. Available in several models, Services Routers typically connect small, branch, or regional offices to a central site, and link Internet service provider (ISP) networks.

The *J-series Services Router Quick Start* provides instructions to initially set up J2300, J2320, J2350, J4350, and J6350 Services Routers. You need no previous JUNOS software experience, but must have managed a network and configured other routers. For more information, see the J-series documentation at http://www.juniper.net/techpubs.

Contents

What You Need To Know 3
Management IP Address 3
J-Web Access 3
CLI Console Access 3
Required Licenses 3
Slot Numbers 4
Interfaces and Ports 4
Remote Access 4
Before You Begin 4
Installing a Services Router 6
Installing J2300 Services Routers 6
Installing J2320 and J2350 Services Routers 6
Installing J4350 or J6350 Services Routers 8
Connecting Power to a Services Router 8
Basic Connection and Configuration with the J-Web Interface 9
Step 1. Connecting, Logging In, and Starting the J-Web Interface 9
Step 2. Updating the Software with the J-Web Interface 10

Step 3. Adding Licenses with the J-Web Interface 11
Step 4. Configuring Basic Settings with J-Web Quick Configuration 11
Basic Connection and Configuration with the CLI 13
Step 1. Connecting, Logging In, and Starting the CLI 13
Step 2. Updating the JUNOS Software with the CLI 14
Step 3. Adding Licenses with the CLI 14
Step 4. Configuring Basic Settings with the CLI 14
J-Web Basics 15
JUNOS CLI Basics 16
Safety Warnings Summary 18
Compliance Statements 21
Related Juniper Networks Documentation 23
Requesting Support 26
Revision History 26

What You Need To Know

Management IP Address

When you first connect a management PC or laptop to a built-in Ethernet port on a Services Router, the router acts as a DHCP client and attempts to perform an autoinstallation. If it does not find a DHCP server, the router assigns 192.168.1.1/24 as the IP address for port 0. (If you are connected to port 1, 192.168.2.1/24 is assigned as the IP address. On the J2320, J2350, J4350 and J6350 routers, port 2 and port 3 are assigned 192.168.3.1/24 and 192.168.4.1/24, respectively.)

Because this address is not part of any explicit configuration, it is removed when you change the configuration *in any way*. You must configure an IP address for this LAN port when you commit your initial configuration. (See "Step 4. Configuring Basic Settings with J-Web Quick Configuration" on page 11 or "Step 4. Configuring Basic Settings with the CLI" on page 14.)

J-Web Access

The Web interface to the router—called the J-Web interface—is enabled by default. To configure the router with the Web interface, you attach a PC or laptop to a built-in Ethernet port. The examples in this document use the first built-in Ethernet port:

- On J2300 routers, the first built-in Ethernet port is Fast Ethernet PORT 0 (internally named fe-0/0/0).
- On J2320, J2350, J4350 and J6350 routers, the first built-in Ethernet port is Gigabit Ethernet port 0/0 (internally named ge-0/0/0).

See "Step 1. Connecting, Logging In, and Starting the J-Web Interface" on page 9.

CLI Console Access

Services Routers are shipped with a console cable and adapter. To configure a Services Router through the console port with the JUNOS command-line interface (CLI), you use a terminal emulation program such as Microsoft Windows HyperTermimal. (See "Step 1. Connecting, Logging In, and Starting the CLI" on page 13.)

Required Licenses

To use the following features on a Services Router, you must purchase a license. (See "Step 3. Adding Licenses with the CLI" on page 14 or "Step 4. Configuring Basic Settings with J-Web Quick Configuration" on page 11.)

- Advanced Border Gateway Protocol (BGP) support for route reflectors
- Data link switching (DLSw)
- J-Flow traffic analysis

Slot Numbers

J2300 routers have built-in WAN ports. Other models have slots for replaceable Physical Interface Modules (PIMs):

- J2320 Services Routers—Slots 1 through 3 are numbered from top to bottom and left to right.
- J2350 Services Routers—Slots 1 through 5 are numbered from top to bottom and left to right.
- J4350 and J6350 Services Routers—Slots 1 through 6 are numbered from top to bottom and left to right.

Interfaces and Ports

Interfaces are named by type, slot number, module number (always 0), and port number. Port numbering starts with 0. For example:

- On J2300 routers, built-in Fast Ethernet LAN PORT 0 and PORT 1, which are in slot 0, are named fe-0/0/0 and fe-0/0/1.
- On J2320, J2350, J4350, and J6350 routers, the built-in Gigabit Ethernet LAN ports 0/0 through 0/3, which are in slot 0, are named ge-0/0/0, ge-0/0/1, ge-0/0/2, and ge-0/0/3.
- On models with replaceable PIMs, the first port on a T1 PIM in slot 1 is named t1-1/0/0.

Remote Access

Although Telnet and SSH are both supported, they are *disabled* by default.

Before You Begin

Before installing and connecting a Services Router, read “Safety Warnings Summary” on page 18.

Then make sure you have the equipment listed in Table 1 on page 5.

Table 1: Equipment Required for Services Router Installation

All Models	J2300 Model Only	All Other Models	Management Access
■ Electrostatic discharge (ESD) grounding strap (not provided) ■ For rack or wall installation, a screwdriver appropriate for the screws or anchors (not provided) ■ For AC power, an AC power cord with a plug appropriate for your geographical location (provided) ■ For DC power, 14 AWG DC power cables with appropriate lugs (not provided) ■ For grounding, 14 AWG grounding cable and lug for the router (not provided)	■ For desk installation, four rubber feet (provided) ■ For rack installation, four mounting screws appropriate for your rack (not provided) ■ For wall installation, four wall screws or anchors capable of supporting the full weight of the chassis, up to 12 lb (5.4 kg)	■ For rack installation, mounting screws appropriate for your rack (not provided). ■ Routers with redundant power supplies require an AC power cord (provided) or DC power cables (not provided) for each power supply. ■ Mounting brackets are preinstalled on J2320 and J2350 models, and must be installed on J4350 and J6350 models.	For CLI access: ■ Management device, such as a PC or laptop, with a serial port (not provided) ■ RJ-45 console (Ethernet "rollover") cable, with an RJ-45-to-DB-9 adapter (both provided) For J-Web access: ■ Management device, such as a PC or laptop, with an Ethernet port (not provided) ■ Ethernet cable (not provided)

CAUTION: A licensed electrician must attach a cable lug to the grounding and power cables that you supply. A cable with an incorrectly attached lug can damage the router.

If you are installing a J4350 or J6350 Services Router, take the following steps:

1. Attach the air filter and filter cover, as shown in Figure 1 on page 5.

Figure 1: Attaching Air Filter and Filter Cover

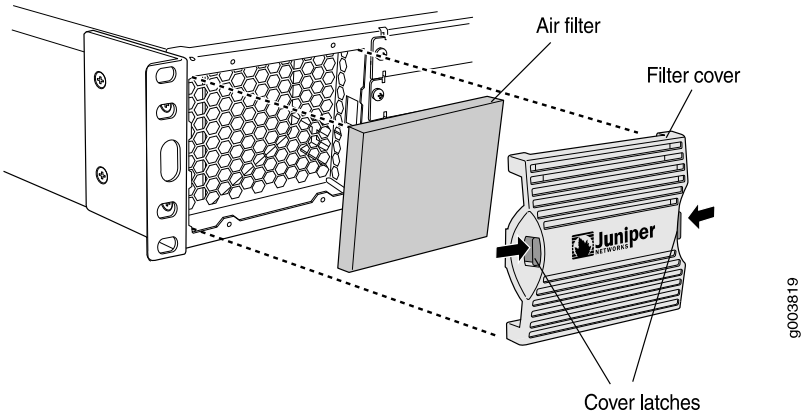

2. Attach the mounting brackets to either the center or front of the chassis, as shown in Figure 2 on page 6.

Figure 2: Attaching Mounting Brackets

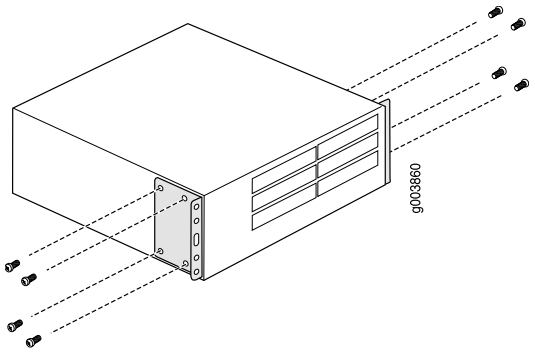

Installing a Services Router

WARNING: A DC-powered J2300 Services Router is intended for installation in a dedicated equipment room where it is accessible by trained personnel only. Other DC-powered Services Routers are intended for installation in a restricted access location.

Installing J2300 Services Routers

To install a J2300 Services Router on a desk, attach the rubber feet to the underside of the chassis.

To install a J2300 Services Router on a wall, attach the rubber feet to the chassis underside, attach a mounting bracket to each side of the chassis, and attach the brackets to the wall. (For instructions, see the *J2300, J4300, and J6300 Services Router Getting Started Guide*.)

To install a J2300 router in a rack:

1. Attach an electrostatic discharge (ESD) grounding strap to your bare wrist and connect the strap to an outside ESD point.
2. Make sure the rack is properly secured to the building in its permanent location.
3. Attach a mounting bracket to each side of the router chassis.
4. Have one person grasp each side of the router, lift the router, and position it in the rack.
5. Have a second person install a mounting screw into each of the bracket holes that are aligned with the threaded holes in the rack.

Installing J2320 and J2350 Services Routers

To install the J2320 and J2350 router into a rack:

1. Have one person grasp the sides of the router, lift the router, and position it in the rack.
2. Align the top hole in each mounting bracket with a hole in each rack rail as shown in Figure 3 on page 7 and Figure 4 on page 7, making sure the chassis is level.

Figure 3: Hanging a J2320 Router in a Rack

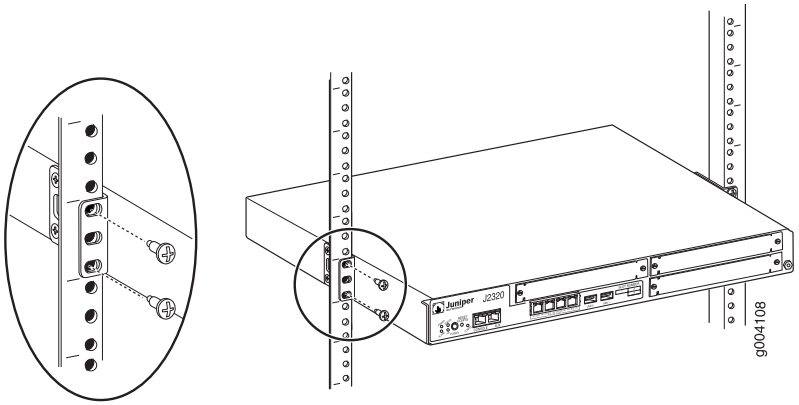

Figure 4: Hanging a J2350 Router in a Rack

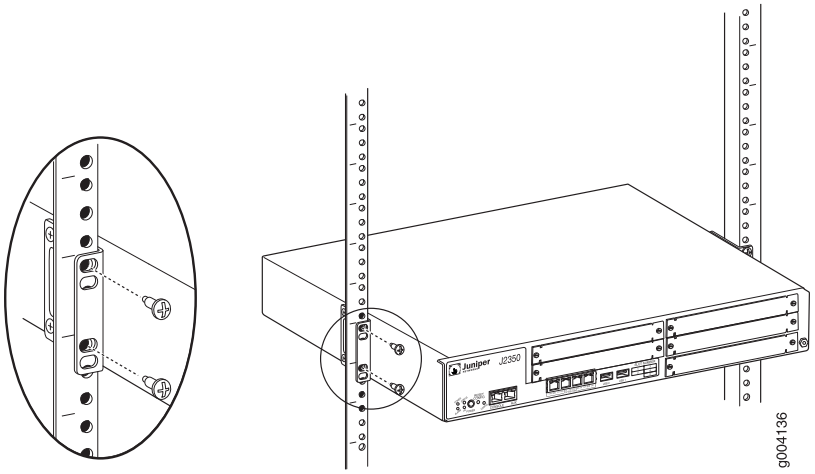

3. Have a second person install a mounting screw into each of the two aligned holes. With a number 2 Phillips screwdriver, tighten the screws.
4. Verify that the mounting screw on one side of the rack is aligned with the mounting screw on the opposite side and that the router is level.
5. Install the second screw in each mounting bracket.

Installing J4350 or J6350 Services Routers

To install a J4350 or J6350 Services Router in a rack:

1. Make sure the rack is properly secured to the building in its permanent location.
2. Attach a screw to each rack rail in the third hole down from where you want the top of the router to be positioned, as shown in Figure 5 on page 8. Screw only part way in, leaving about 1/4 in. (6 mm) distance between the screw head and the rail.
3. Lift the router and insert the elliptical openings in the mounting brackets onto the partially inserted screws so that the router is hanging from the two screws.

Figure 5: Hanging the Router in the Rack

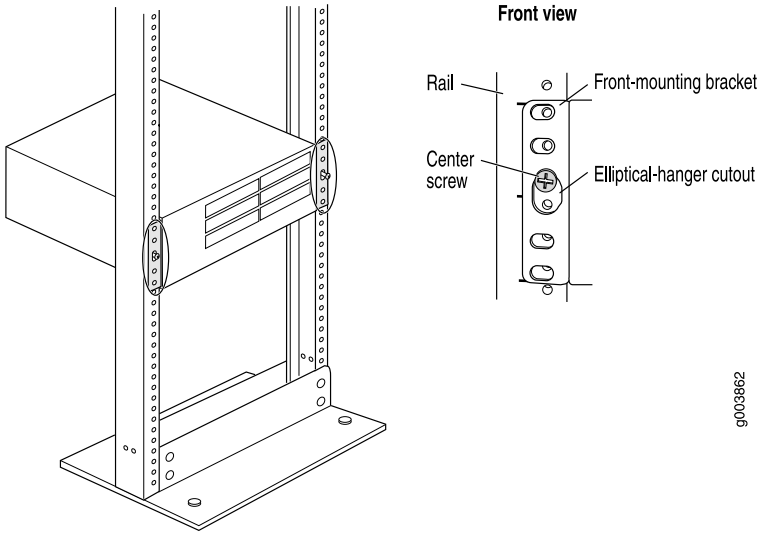

4. Install at least two mounting screws into each mounting bracket, in addition to the center screws from which the router hangs.

Connecting Power to a Services Router

J2300, J2320, J2350, and J4350 Services Routers have a fixed power supply. J6350 Services Routers have field-replaceable AC or DC power supplies.

To connect AC or DC power:

1. Connect the router to earth ground with a 14 AWG grounding cable:
   a. Connect one end to a proper earth ground point (the rack, for example).
   b. Remove the screw and washer from the PEM nut on the protective earthing terminal at the rear of the router chassis. (The J4350 and J6350 chassis have two PEM nuts.)

c. Secure the other end of the cable to this grounding point with the washer and then with the screw.

2. For an AC power supply only:

   a. Insert the appliance coupler end of the power cord into the appliance inlet on the router's power supply faceplate.

   b. Insert the plug into an AC power source receptacle.

   c. If the power supply includes a on/off switch, turn the switch to on.

3. For a DC power supply only:

   a. Ensure that the voltage across the DC power source cable leads is 0 volts and that the cable leads cannot become active during installation.

   b. Remove the clear plastic cover protecting the terminal block.

   c. Remove the two center screws next to the labels –48 VDC and RTN.

   d. Secure the positive (+) DC source power cable lug to the RTN terminal, tightening the screw only until snug. Do not overtighten.

   e. Secure the negative (–) DC source power cable lug to the –48 VDC terminal, tightening the screw only until snug. Do not overtighten.

   f. Replace the plastic cover.

4. Repeat Step 2 or Step 3 for the second power supply, if one is installed.

For complete instructions, see the Getting Started Guide for your router.

Basic Connection and Configuration with the J-Web Interface

For J-Web access, you connect from your management PC or laptop to the Services Router through one of the built-in Ethernet interfaces. The examples in this document use port 0. (For information about the J-Web interface, see "J-Web Basics" on page 15.)

Step 1. Connecting, Logging In, and Starting the J-Web Interface

When the Services Router is powered on for the first time, it searches for a DHCP server, and if it does not find one, it assigns an IP address within the 192.168.1.0/24 subnetwork to any devices connected to it.

To connect to the J-Web interface through port 0/0 on the router:

1. On the management device, such as a PC or laptop, you use to access the J-Web interface, verify that the address of the port that you connect to the router is set to one of the following:
   - An Ethernet address on the 192.168.1/24 subnetwork other than 192.168.1.1
   - An Ethernet address from a DHCP server
2. Turn off the power to the management device.
3. Plug one end of the Ethernet cable into the Ethernet port on the management device.
4. Connect the other end of the Ethernet cable to the built-in Ethernet port on the router.
5. Power on the router by pressing the power button on the front panel.
6. Wait until the STATUS LED on the front panel turns solid green.
7. Turn on the power to the management device. The router assigns an IP address to the management device within the 192.168.1/24 subnetwork if the device is configured to use DHCP.
8. From the management device, open a Web browser and enter the IP address 192.168.1.1 in the address field. The Set Up Quick Configuration page appears.
9. Configure basic settings for your router as described in "Step 4. Configuring Basic Settings with J-Web Quick Configuration" on page 11.



NOTE: You must manually configure the IP address for the management port you are using before you save your initial configuration. When you save the configuration for the first time, the DHCP lease is lost and you will lose the connection to the router if you have not manually configured the IP address. If you lose connection through the management interface, you must connect through the console port.

Step 2. Updating the Software with the J-Web Interface

After starting up the Services Router, you might want to download the latest version of the JUNOS software from the Juniper Networks Web site and load it onto the router. To update the JUNOS software:

1. Go to http://www.juniper.net/support, and follow the links to download the JUNOS software for J-series routers to your PC or laptop.
2. Log in to the J-Web interface.
3. Click **Manage > Software > Upload software package**.
4. Click **Browse**, locate the JUNOS software package file on your PC or laptop hard drive, and open the file.
5. Select the check box next to **Reboot If Required**, and click **Upload Package**.

For complete instructions, see the *J-series Services Router Administration Guide*.

Step 3. Adding Licenses with the J-Web Interface

If you purchased one or more licenses, you received an envelope with instructions for obtaining license keys from the Web. To enable each license on the router, you must add the license key. You can add one or more license keys. To add a license key and enable a license:

1. Follow the instructions in your license envelope to generate the license key from the Web site.
2. Copy the license key onto the router with the J-Web interface:
   a. Click **Manage > Licenses**.
   b. Enter the license key in one of the following ways:
      - In the License File URL box, type the URL for the license key Web site.
      - Copy the license key text, and paste it into the License Key Text box, separating multiple license keys with a blank line.
   c. Click **OK**.

For complete instructions, see the Getting Started Guide for your router.

Step 4. Configuring Basic Settings with J-Web Quick Configuration

When you click **OK** or **Apply** on J-Web Quick Configuration pages, the configuration is saved and activated automatically. To configure basic settings with the J-Web interface:

1. If the Set Up Quick Configuration page is not displayed, select **Configuration > Quick Configuration > Set Up**.
2. Enter information in the boxes on the Set Up Quick Configuration page as shown in Table 2 on page 11, then click **OK** or **Apply**.

Table 2: J-Web Set Up Quick Configuration

Field	Description
Host Name (required)	Hostname of the router—for example, Chicago.
Domain Name	Network or subnetwork that the router belongs to.
Root Password (required)	Root password that user “root” can use to log in to the router.
Verify Root Password (required)	Retyped password.
Time Zone	Time zone in which the router is located.
NTP Servers	NTP server to synchronize the system time.
Current System Time	Your current time and date.
DNS Name Servers	DNS server to resolve hostnames into addresses.

Table 2: J-Web Set Up Quick Configuration *(continued)*

Field	Description
Domain Search	Name of each domain to include in a DNS search.
Default Gateway	Default route. The IP address of a default router that the Services Router can use to direct packets addressed to networks not explicitly listed in the routing table.
Loopback Address	Reserved IP address that is always available on the router. By default, this address is set to 127.0.0.1/32.
fe-0/0/0 Address or ge-0/0/0 Address	IP address and prefix length of built-in Ethernet port 0. The interface fe-0/0/0 or ge-0/0/0 is typically used as the management interface for accessing the router. The DHCP client sets this address to 192.168.1.1/24 if no DHCP server is found. You must enter the fe-0/0/0 or ge-0/0/0 address on the Quick Configuration Set Up page before you click **Apply** or **OK**. If you do not manually configure this address, the DHCP lease is lost and you will lose your connection to the J-Web interface when you click **Apply** or **OK**.
Allow Telnet Access	Enables remote access to the router with Telnet.
Allow JUNOScript over Clear-Text Access	Allows JUNOScript to send unencrypted text to the router over a TCP connection.
Allow SSH Access	Enables remote SSH access to the router.

3. To configure additional interfaces:
   a. Under Quick Configuration, click **Interfaces**, and then click the interface you want to configure.
   b. On the Interfaces page, click **Add** to add a logical interface.

      IP addresses are configured on the logical interface.
   c. In the two boxes provided, type the IP address (for example, 192.168.1.4) and the number of bits in the subnet mask (for example, 24), click **Add**, and then click **OK** or **Apply**.

   To edit an existing interface, you click the logical interface.
4. To enable routing protocols, under Quick Configuration click **Routing**.
   - To add static routes, click **Static Routing**.
   - To enable a routing protocol, click the protocol.

     When you are finished with a page, click **OK** or **Apply**.

For complete instructions, see the *J-series Services Router Basic LAN and WAN Access Configuration Guide*.

Basic Connection and Configuration with the CLI

For CLI access, you connect from your management PC or laptop to the Services Router through the console port. (For information about the CLI, see "JUNOS CLI Basics" on page 16.)

Step 1. Connecting, Logging In, and Starting the CLI

You are prompted for a username and password. The default username is root. Because no password is initially required, press Enter at the password prompt for a first-time login.

To access a Services Router with the JUNOS CLI:

1. Turn off power to the management PC or laptop.
2. Connect one end of the console cable to the serial port adapter, plug the adapter into a serial port on the PC or laptop, and plug the other end of the cable into the console port on the Services Router.
3. Turn on power to the PC or laptop.
4. On the PC or laptop, start the terminal emulation program (such as Microsoft Windows HyperTerminal), select the COM port, and configure the following port settings: 9600 (bits per second), 8 (data bits), none (parity), 1 (stop bits), and none (flow control).
5. Press the POWER button on the router, and verify that the POWER LED turns green.
6. Wait for the system to boot, and when presented with a login prompt, log in as root, and press Enter at the Password prompt.

   When you have been authenticated through the CLI, you enter the UNIX shell:

   ```
   routername (ttyd0)

   login: root

   Password:
   JUNOS 8.0R1 2006-07-01 01:59:49 UTC
   root@%
   ```

7. At the % prompt, type the cli command and press Enter. The prompt changes to an angle bracket (>) when you enter CLI operational mode.

   ```
   root@% cli root

   root>
   ```

For complete instructions, see the Getting Started Guide for your router.

Step 2. Updating the JUNOS Software with the CLI

After starting up the Services Router, you might want to download the latest version of the JUNOS software from the Juniper Networks Web site and load it onto the router. You can use the CLI, but we recommend the J-Web interface for the download.

To update the JUNOS software with the CLI:

1. Go to http://www.juniper.net/support, and follow the links to download the JUNOS software for J-series routers to an FTP server.
2. Download the JUNOS software to the router with the CLI or J-Web interface:

   root> **request system software add validate unlink reboot** *source*

For complete instructions, see the *J-series Services Router Administration Guide*.

Step 3. Adding Licenses with the CLI

If you purchased one or more licenses, you received an envelope with instructions for obtaining license keys from the Web. To enable each license on the router, you must add the license key. You can add one or more license keys from the CLI.

To add a license key and enable a license:

1. Follow the instructions in your license envelope to generate the license key from the Web site.
2. Copy the license key onto the router with the CLI:
   a. Type the following command, and press Enter:

      root> **request system license add terminal**

   b. When prompted, copy and paste the license key from the Web site at the command line, separating multiple license keys with a blank line.

   c. To exit license key entry, press Ctrl + D.

For complete instructions, see the Getting Started Guide for your router.

Step 4. Configuring Basic Settings with the CLI

In CLI configuration mode, you use the set command to enable features, and the delete command to disable them. The commands you enter do not update the active configuration on the router until you use the commit command.

To configure basic settings with the CLI:

1. From the CLI, enter configuration mode:

   root> **configure**
   root#

2. Set the IP addresses of the built-in Ethernet ports. For example:

   - On a J2300 router:

     ```
     root# set interfaces fe-0/0/0 unit 0 family inet address 192.168.1.1/24
     root# set interfaces fe-0/0/1 unit 0 family inet address 192.168.2.1/24
     ```

   - On a J4350 or J6350 router:

     ```
     root# set interfaces ge-0/0/0 unit 0 family inet address 192.168.1.1/24
     root# set interfaces ge-0/0/1 unit 0 family inet address 192.168.2.1/24
     root# set interfaces ge-0/0/2 unit 0 family inet address 192.168.3.1/24
     root# set interfaces ge-0/0/3 unit 0 family inet address 192.168.4.1/24
     ```

   The unit number is the logical interface number. IP addresses are configured on the logical interface. Setting the protocol family to inet specifies the routing table of IPv4 addresses.

3. Set a default route (default gateway) for IPv4 packets. For example:

   ```
   root# set routing-options static route 192.168.1.254/24 next-hop 10.1.1.50
   ```

4. Configure one or more static routes:

   ```
   root# set routing-options static route destination-prefix next-hop address
   ```

5. Set the hostname. For example:

   ```
   root# set system host-name Chicago
   ```

6. Save your configuration settings and activate them on the Services Router:

   ```
   root# commit
   ```

For complete instructions, see the *J-series Services Router Basic LAN and WAN Access Configuration Guide*.

J-Web Basics

The task bar at the top of the J-Web interface identifies the main J-Web functions. You access specific tasks on the left.

- Monitor—Output from common show commands
- Configuration—Quick Configuration wizards and a graphical version of the CLI
- Diagnose—Ping, traceroute, and packet capture
- Manage—Configuration file management and licenses
- Events—System log messages
- Alarms—Active alarms

The first time you connect to a Services Router with the J-Web interface, you bypass the login page and go directly to the Set Up Quick Configuration page. At subsequent logins, you go directly to the System Monitor page.

Click **Monitor** to display information about the system (system serial number, CPU, and memory usage), interfaces, configured routes, and other Services Router functions.

Click **Configuration** to access Quick Configuration "wizard" pages for common configuration tasks such as initial setup, certificate installation, basic routing setup, and creation of firewall filters and IPSec tunnels. Each new release of the JUNOS software adds more Quick Configuration features.

For configuration details and tasks not covered by Quick Configuration, you can access a graphical version of the JUNOS CLI known as the J-Web configuration editor. Select **Configuration > View and Edit Configuration > Edit Configuration** to display a list of configurable features—like the list displayed when you enter set ? in CLI configuration mode.

When you click **OK** or **Apply** on J-Web Quick Configuration pages, the configuration is saved and activated automatically. In contrast, you must click **Commit** to apply changes on J-Web configuration editor pages.

For complete information about J-Web configuration features, see the *J-series Services Router Basic LAN and WAN Access Configuration Guide*.

JUNOS CLI Basics

After you start the CLI with the cli command, type a question mark (?) to display a list of the available commands:

```
root> ?
Possible completions:
  clear             Clear information in the system
  configure         Manipulate software configuration information
  file              Perform file operations
  help              Provide help information
  monitor           Show real-time debugging information
  mtrace            Trace multicast path from source to receiver
  ping              Ping remote target
  quit              Exit the management session
  request           Make system-level requests
  restart           Restart software process
  set               Set CLI properties, date/time, craft interface message
  show              Show system information
  ssh               Start secure shell on another host
  start             Start shell
  telnet            Telnet to another host
  test              Perform diagnostic debugging
  traceroute        Trace route to remote host
```

To display the options available for a command, type the command followed by a space and a question mark:

```
root> show ?
```

```
Possible completions:
  accounting           Show accounting profiles and records
  aps                  Show Automatic Protection Switching information
  arp                  Show system Address Resolution Protocol table entries
  as-path              Show table of known autonomous system paths
  bfd                  Show Bidirectional Forwarding Detection information
  bgp                  Show Border Gateway Protocol information
  chassis              Show chassis information
  class-of-service     Show class-of-service (CoS) information
  cli                  Show command-line interface settings
  configuration        Show current configuration
  connections          Show circuit cross-connect connections
  dialer               Show dialer information
  dlsw                 Show DLSw information
---(more 93%)---
```

To use command completion, type the first few letters of a command and press the Spacebar or the Tab key.

For example, when you type the following partial command, the system completes the command `show chassis hardware` and displays hardware information:

```
root> sh<tab> ch<tab> h<tab>
Hardware inventory:
Item             Version  Part number  Serial number     Description
Chassis                                JN000212AA        J2300
Routing Engine   RevX1.8  710-009989   CORE97133         RE-J.1
FPC 0            RevX1.5  710-009991   CORE96352         FPC
PIC 0                                                   2x FE, 2x Serial
```

Type the following partial command to display the JUNOS software version running on the router:

```
root> sh ver
Hostname: host
Model: j2300
JUNOS Software Release [8.0-20060607.0] (Export edition)
```

To access configuration mode, enter the `configure` command. The prompt changes to a pound sign (#).

```
root> configure
root#
```

To activate changes to the configuration, enter the `commit` command.

```
root> commit
root#
```

To exit configuration mode, enter the `exit` command. Use the `exit` command again to exit the CLI completely.

```
root# exit
root> exit
root@%
```

Safety Warnings Summary



NOTE: This is a summary of safety warnings. For a complete list of warnings, including translations, see the Getting Started Guide for your router at http://www.juniper.net/techpubs/.



WARNING: Certain ports on the router are designed for use as intrabuilding (within-the-building) interfaces only (Type 2 or Type 4 ports as described in GR-1089-CORE, Issue 4) and require isolation from the exposed outside plant (OSP) cabling. To comply with NEBS requirements and protect against lightening surges and commercial power disturbances, the intrabuilding ports *must not* be metallically connected to interfaces that connect to the OSP or its wiring. The intrabuilding ports on the router are suitable for connection to intrabuilding or unexposed wiring or cabling only. The addition of primary protectors is not sufficient protection for connecting these interfaces metallically to OSP wiring.



CAUTION: To comply with intrabuilding lightning and surge requirements, intrabuilding wiring must be shielded, and the shield for the wiring must be grounded at both ends.



CAUTION: Before removing or installing components of a router, attach an ESD strap to an ESD point and place the other end of the strap around your bare wrist. Failure to use an ESD strap could result in damage to the router.



CAUTION: For routers with AC power supplies, an external surge protective device (SPD) must be used at the AC power source.

- Permit only trained and qualified personnel to install or replace Services Router components.
- The equipment is suitable for installation in locations where the National Electrical Code (NEC) applies, as well as in Network Telecommunication Facilities.
- Perform only the procedures described in this quick start and the Getting Started Guide for your router. Other services must be performed by authorized service personnel only.
- Before you connect a Services Router to a power source, read the installation instructions in the Getting Started Guide for your router.
- Before installing the router, read the guidelines about preparing for router installation in the Getting Started Guide for your router, to make sure that the site meets power, environmental, and clearance requirements for the router.
- When installing the Services Router, do not use a ramp inclined at more than 10 degrees.
- We recommend that two people perform installation of J-series Services Routers. Have one person lift the router into position and a second person secure the mounting screws. To prevent injury, keep your back straight and lift with your legs, not your back.
- Mount the Services Router at the bottom of the rack if it is the only unit in the rack.
- When mounting the Services Router in a partially filled rack, load the rack from the bottom to the top, with the heaviest component at the bottom of the rack.
- If the rack is provided with stabilizing devices, install the stabilizers before mounting or servicing the Services Router in the rack.
- Grounding surfaces are to be cleaned and brought to a bright finish before grounding connections can be made.
- When removing or installing an electrical component, always place it component-side up on a flat antistatic surface or in an electrostatic bag.
- Do not work on the system or connect or disconnect cables during electrical storms.
- Before working on equipment that is connected to power lines, remove jewelry, including rings, necklaces, and watches. Metal objects heat up when connected to power and ground and can cause serious burns or become welded to the terminals.
- Failure to observe these safety warnings can result in serious physical injury.
- AC power cable warning (Japan):

WARNING: The attached power cable is only for this product. Do not use the cable for another product.

注意

附属の電源コードセットはこの製品専用です。
他の電気機器には使用しないでください。

g017253

Compliance Statements

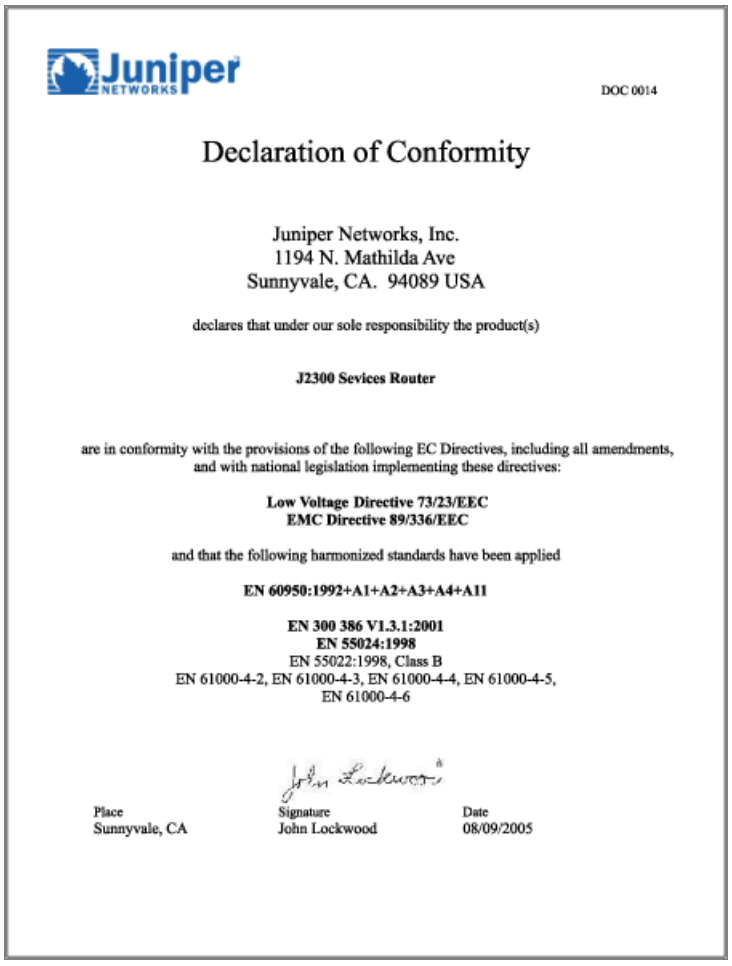

DOC 0014

Declaration of Conformity

Juniper Networks, Inc.
1194 N. Mathilda Ave
Sunnyvale, CA. 94089 USA

declares that under our sole responsibility the product(s)

J2300 Sevices Router

are in conformity with the provisions of the following EC Directives, including all amendments, and with national legislation implementing these directives:

Low Voltage Directive 73/23/EEC
EMC Directive 89/336/EEC

and that the following harmonized standards have been applied

EN 60950:1992+A1+A2+A3+A4+A11

EN 300 386 V1.3.1:2001
EN 55024:1998
EN 55022:1998, Class B
EN 61000-4-2, EN 61000-4-3, EN 61000-4-4, EN 61000-4-5, EN 61000-4-6

Place	Signature	Date
Sunnyvale, CA	John Lockwood	08/09/2005

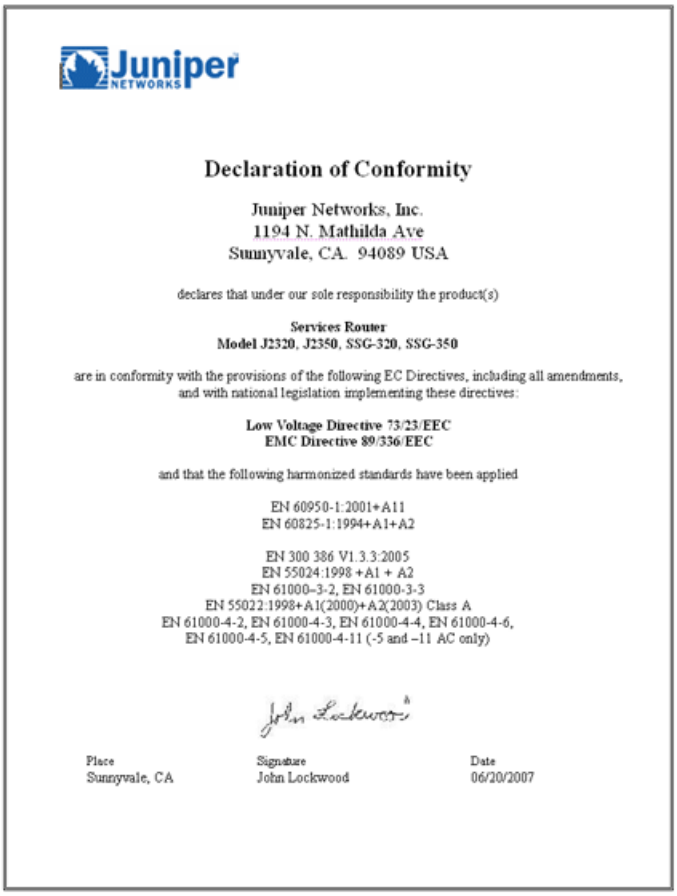

Declaration of Conformity

Juniper Networks, Inc.
1194 N. Mathilda Ave
Sunnyvale, CA. 94089 USA

declares that under our sole responsibility the product(s)

Services Router
Model J2320, J2350, SSG-320, SSG-350

are in conformity with the provisions of the following EC Directives, including all amendments, and with national legislation implementing these directives:

Low Voltage Directive 73/23/EEC
EMC Directive 89/336/EEC

and that the following harmonized standards have been applied

EN 60950-1:2001+A11
EN 60825-1:1994+A1+A2

EN 300 386 V1.3.3:2005
EN 55024:1998 +A1 + A2
EN 61000–3-2, EN 61000-3-3
EN 55022:1998+A1(2000)+A2(2003) Class A
EN 61000-4-2, EN 61000-4-3, EN 61000-4-4, EN 61000-4-6,
EN 61000-4-5, EN 61000-4-11 (-5 and –11 AC only)

Place	Signature	Date
Sunnyvale, CA	John Lockwood	06/20/2007

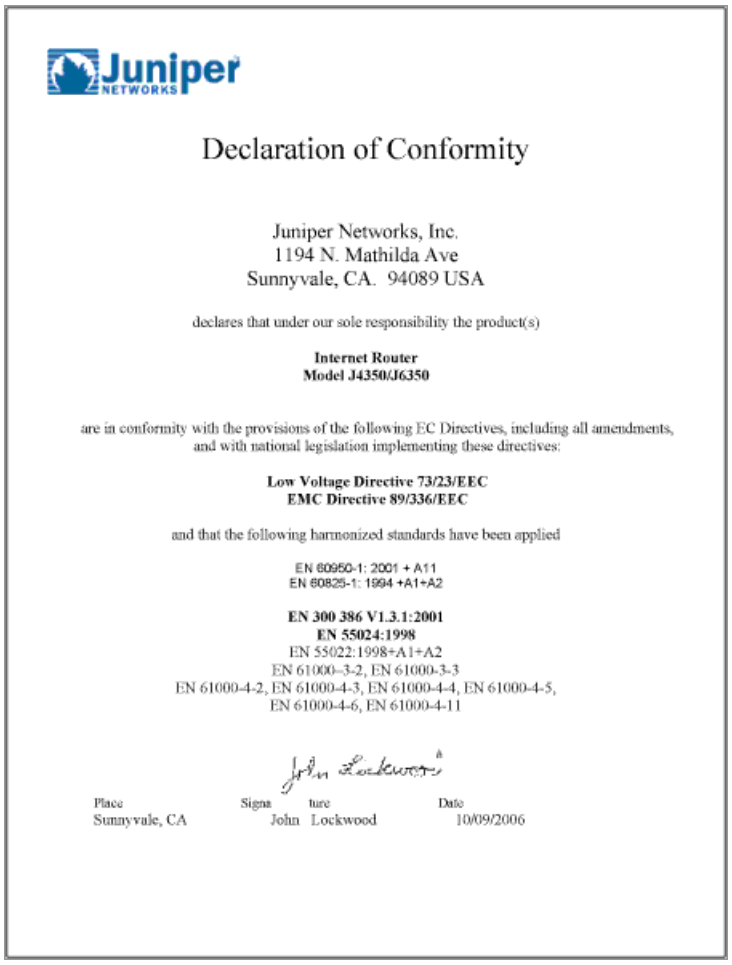

Declaration of Conformity

Juniper Networks, Inc.
1194 N. Mathilda Ave
Sunnyvale, CA. 94089 USA

declares that under our sole responsibility the product(s)

Internet Router
Model J4350/J6350

are in conformity with the provisions of the following EC Directives, including all amendments, and with national legislation implementing these directives:

Low Voltage Directive 73/23/EEC
EMC Directive 89/336/EEC

and that the following harmonized standards have been applied

EN 60950-1: 2001 + A11
EN 60825-1: 1994 +A1+A2

EN 300 386 V1.3.1:2001
EN 55024:1998
EN 55022:1998+A1+A2
EN 61000–3-2, EN 61000-3-3
EN 61000-4-2, EN 61000-4-3, EN 61000-4-4, EN 61000-4-5, EN 61000-4-6, EN 61000-4-11

Place	Signature	Date
Sunnyvale, CA	John Lockwood	10/09/2006

Related Juniper Networks Documentation

Table 3 on page 23 lists and describes the publications for J-series Services Routers, the JUNOS CLI, the JUNOScript application programming interface (API), and the JUNOScope network management software.

Table 3: Juniper Networks Technical Documentation

Title	Description
J-series Guides	
Getting Started Guide	Provides an overview, basic instructions, and specifications for J-series Services Routers. The guide explains how to prepare your site for installation, unpack and install the router and its components, install licenses, and establish basic connectivity. Use the Getting Started Guide for your router model.
J-series Services Router Basic LAN and WAN Access Configuration Guide	Explains how to configure the interfaces on J-series Services Routers for basic IP routing with standard routing protocols, ISDN backup, and digital subscriber line (DSL) connections.

Table 3: Juniper Networks Technical Documentation *(continued)*

Title	Description
J-series Services Router Advanced WAN Access Configuration Guide	Explains how to configure J-series Services Routers in virtual private networks (VPNs) and multicast networks, configure data link switching (DLSw) services, and apply routing techniques such as policies, stateless and stateful firewall filters, IP Security (IPSec) tunnels, and class-of-service (CoS) classification for safer, more efficient routing.
J-series Services Router Administration Guide	Shows how to manage users and operations, monitor network performance, upgrade software, and diagnose common problems on J-series Services Routers.
JUNOS Configuration Guides	
JUNOS Access Privilege Guide	Explains how to configure access privileges in user classes by using permission flags and regular expressions. Lists the permission flags along with their associated command-line interface (CLI) operational mode commands and configuration statements.
JUNOS Class of Service Configuration Guide	Provides an overview of the class-of-service (CoS) functions of the JUNOS software and describes how to configure CoS features, including configuring multiple forwarding classes for transmitting packets, defining which packets are placed into each output queue, scheduling the transmission service level for each queue, and managing congestion through the random early detection (RED) algorithm.
JUNOS CLI User Guide	Describes how to use the JUNOS command-line interface (CLI) to configure, monitor, and manage Juniper Networks routing platforms. This material was formerly covered in the *JUNOS System Basics Configuration Guide*.
JUNOS Feature Guide	Provides a detailed explanation and configuration examples for several of the most complex features in the JUNOS software.
JUNOS High Availability Configuration Guide	Provides an overview of hardware and software resources that ensure a high level of continuous routing platform operation and describes how to configure high availability (HA) features such as nonstop routing (NSR) and graceful Routing Engine switchover (GRES).
JUNOS MPLS Applications Configuration Guide	Provides an overview of traffic engineering concepts and describes how to configure traffic engineering protocols.
JUNOS Multicast Protocols Configuration Guide	Provides an overview of multicast concepts and describes how to configure multicast routing protocols.
JUNOS Multiplay Solutions Configuration Guide	Describes how you can deploy IPTV and voice over IP (VoIP) services in your network.
JUNOS Network Interfaces Configuration Guide	Provides an overview of the network interface functions of the JUNOS Internet software and describes how to configure the network interfaces on the routing platform.
JUNOS Network Management Configuration Guide	Provides an overview of network management concepts and describes how to configure various network management features, such as SNMP and accounting options.
Secure Configuration Guide for Common Criteria and JUNOS-FIPS	Provides an overview of secure Common Criteria and JUNOS-FIPS protocols for the JUNOS Internet software and describes how to install and configure secure Common Criteria and JUNOS-FIPS on a routing platform.
JUNOS Software Installation and Upgrade Guide	Provides a description of JUNOS software components and packaging, and includes detailed information about how to initially configure, reinstall, and upgrade the JUNOS system software. This material was formerly covered in the *JUNOS System Basics Configuration Guide*.

Table 3: Juniper Networks Technical Documentation *(continued)*

Title	Description
JUNOS Policy Framework Configuration Guide	Provides an overview of policy concepts and describes how to configure routing policy, firewall filters, forwarding options, and cflowd.
JUNOS Routing Protocols Configuration Guide	Provides an overview of routing concepts and describes how to configure routing, routing instances, and unicast routing protocols.
JUNOS Services Interfaces Configuration Guide	Provides an overview of the services interfaces functions of the JUNOS software and describes how to configure the services interfaces on the router.
JUNOS System Basics Configuration Guide	Describes Juniper Networks routing platforms, and provides information about how to configure basic system parameters, supported protocols and software processes, authentication, and a variety of utilities for managing your router on the network.
JUNOS VPNs Configuration Guide	Provides an overview and describes how to configure Layer 2 and Layer 3 virtual private networks (VPNs), virtual private LAN service (VPLS), and Layer 2 circuits. Provides configuration examples.
JUNOS References	
JUNOS Hierarchy and RFC Reference	Describes the JUNOS *configuration mode* commands. Provides a hierarchy reference that displays each level of a configuration hierarchy and includes all possible configuration statements that can be used at that level. This material was formerly covered in the *JUNOS System Basics Configuration Guide*.
JUNOS System Basics and Services Command Reference	Describes the JUNOS software *operational mode* commands you use to monitor and troubleshoot system basics, including commands for real-time monitoring and route (or path) tracing, system software management, and chassis management. This guide also describes commands for monitoring and troubleshooting services such as class of service (CoS), IP Security (IPSec), stateful firewalls, flow collection, and flow monitoring.
JUNOS Interfaces Command Reference	Describes the JUNOS software *operational mode*commands you use to monitor and troubleshoot interfaces.
JUNOS Routing Protocols and Policies Command Reference	Describes the JUNOS software *operational mode* commands you use to monitor and troubleshoot routing policies and protocols, including firewall filters.
JUNOS System Log Messages Reference	Describes how to access and interpret system log messages generated by JUNOS software modules and provides a reference page for each message.
JUNOS API and Scripting Documentation	
JUNOScript API Guide	Describes how to use the JUNOScript application programming interface (API) to monitor and configure Juniper Networks routers.
JUNOS XML API Configuration Reference	Provides reference pages for the configuration tags in the JUNOScript API.
JUNOS XML API Operational Reference	Provides reference pages for the operational tags in the JUNOScript API.
JUNOS Configuration and Diagnostic Automation Guide	Describes how to use the commit script and self-diagnosis features of the JUNOS software. This guide explains how to enforce custom configuration rules defined in scripts, how to use commit script macros to provide simplified aliases for frequently used configuration statements, and how to configure diagnostic event policies.

Table 3: Juniper Networks Technical Documentation *(continued)*

Title	Description
NETCONF API Guide	Describes how to use the NETCONF API to monitor and configure Juniper Networks routing platforms.
JUNOScope Software Documentation	
JUNOScope Software User Guide	Describes the JUNOScope software graphical user interface (GUI), how to install and administer the software, and how to use the software to manage router configuration files and monitor router operations.
Release Notes	
J-series Services Router Release Notes	Summarize new features, identify hardware problems, provide information omitted from the manual, and contain upgrade and downgrade instructions.
JUNOS Release Notes	Summarize new features for a particular software release, provide corrections and updates to published JUNOS and JUNOScript manuals, provide information that might have been omitted from the manuals, and describe upgrade and downgrade procedures.
JUNOScope Release Notes	Contain corrections and updates to the published JUNOScope manual, provide information that might have been omitted from the manual, and describe upgrade and downgrade procedures.

Requesting Support

For technical support, open a support case with the Case Manager link at http://www.juniper.net/support/ or call 1-888-314-JTAC (from the United States, Canada, or Mexico) or 1-408-745-9500 (from elsewhere).

Revision History

12 October 2007—530-021980-01 Revision 1.

Copyright © 2007, Juniper Networks, Inc. All rights reserved.

Juniper Networks, the Juniper Networks logo, NetScreen, and ScreenOS are registered trademarks of Juniper Networks, Inc. in the United States and other countries. JUNOS and JUNOSe are trademarks of Juniper Networks, Inc. All other trademarks, service marks, registered trademarks, or registered service marks are the property of their respective owners.

Juniper Networks assumes no responsibility for any inaccuracies in this document. Juniper Networks reserves the right to change, modify, transfer, or otherwise revise this publication without notice.

Products made or sold by Juniper Networks or components thereof might be covered by one or more of the following patents that are owned by or licensed to Juniper Networks: U.S. Patent Nos. 5,473,599, 5,905,725, 5,909,440, 6,192,051, 6,333,650, 6,359,479, 6,406,312, 6,429,706, 6,459,579, 6,493,347, 6,538,518, 6,538,899, 6,552,918, 6,567,902, 6,578,186, and 6,590,785.