

J2320, J2350, J4350, and J6350 Services Router

Getting Started Guide

Release 8.5

Juniper Networks, Inc.
1194 North Mathilda Avenue
Sunnyvale, California 94089
USA
408-745-2000
www.juniper.net

Part Number: 530-021976-01, Revision 1

This product includes the Envoy SNMP Engine, developed by Epilogue Technology, an Integrated Systems Company. Copyright © 1986-1997, Epilogue Technology Corporation. All rights reserved. This program and its documentation were developed at private expense, and no part of them is in the public domain.

This product includes memory allocation software developed by Mark Moraes, copyright © 1988, 1989, 1993, University of Toronto.

This product includes FreeBSD software developed by the University of California, Berkeley, and its contributors. All of the documentation and software included in the 4.4BSD and 4.4BSD-Lite Releases is copyrighted by the Regents of the University of California. Copyright © 1979, 1980, 1983, 1986, 1988, 1989, 1991, 1992, 1993, 1994. The Regents of the University of California. All rights reserved.

GateD software copyright © 1995, the Regents of the University. All rights reserved. Gate Daemon was originated and developed through release 3.0 by Cornell University and its collaborators. Gated is based on Kirton's EGP, UC Berkeley's routing daemon (routed), and DCN's HELLO routing protocol. Development of Gated has been supported in part by the National Science Foundation. Portions of the GateD software copyright © 1988, Regents of the University of California. All rights reserved. Portions of the GateD software copyright © 1991, D. L. S. Associates.

This product includes software developed by Maker Communications, Inc., copyright © 1996, 1997, Maker Communications, Inc.

Juniper Networks, the Juniper Networks logo, NetScreen, and ScreenOS are registered trademarks of Juniper Networks, Inc. in the United States and other countries. JUNOS and JUNOSe are trademarks of Juniper Networks, Inc. All other trademarks, service marks, registered trademarks, or registered service marks are the property of their respective owners.

Juniper Networks assumes no responsibility for any inaccuracies in this document. Juniper Networks reserves the right to change, modify, transfer, or otherwise revise this publication without notice.

Products made or sold by Juniper Networks or components thereof might be covered by one or more of the following patents that are owned by or licensed to Juniper Networks: U.S. Patent Nos. 5,473,599, 5,905,725, 5,909,440, 6,192,051, 6,333,650, 6,359,479, 6,406,312, 6,429,706, 6,459,579, 6,493,347, 6,538,518, 6,538,899, 6,552,918, 6,567,902, 6,578,186, and 6,590,785.

J2320, J2350, J4350, and J6350 Services Router Getting Started Guide
Release 8.5
Copyright © 2007, Juniper Networks, Inc.
All rights reserved. Printed in USA.

Writing: Nidhi Bhargava, Michael Bushong, Maya Devi, Taffy Everts, Elizabeth Gardner, Walter Goralski, Joshua Kim, Jerry Isaac, Archana Maheshwari, Hareesh Kumar Kozhippurath Narayana Panicker, Laura Phillips, Cheryl Potter, Frank Reade, Swapna Steiger, Hariharan I.S, Selvakumar T. S., Alan Twhigg, Keldyn West, and Aiswarya J.Y.
Editing: Taffy Everts and Stella Hackell
Illustration: Faith Bradford Brown and Nathaniel Woodward
Cover Design: Edmonds Design

Revision History
12 October 2007—Revision 1.

The information in this document is current as of the date listed in the revision history.

YEAR 2000 NOTICE

Juniper Networks hardware and software products are Year 2000 compliant. The JUNOS software has no known time-related limitations through the year 2038. However, the NTP application is known to have some difficulty in the year 2036.

SOFTWARE LICENSE

The terms and conditions for using this software are described in the software license contained in the acknowledgment to your purchase order or, to the extent applicable, to any reseller agreement or end-user purchase agreement executed between you and Juniper Networks. By using this software, you indicate that you understand and agree to be bound by those terms and conditions. Generally speaking, the software license restricts the manner in which you are permitted to use the software and may contain prohibitions against certain uses. The software license may state conditions under which the license is automatically terminated. You should consult the license for further details. For complete product documentation, please see the Juniper Networks Web site at www.juniper.net/techpubs.

End User License Agreement

READ THIS END USER LICENSE AGREEMENT ("AGREEMENT") BEFORE DOWNLOADING, INSTALLING, OR USING THE SOFTWARE. BY DOWNLOADING, INSTALLING, OR USING THE SOFTWARE OR OTHERWISE EXPRESSING YOUR AGREEMENT TO THE TERMS CONTAINED HEREIN, YOU (AS CUSTOMER OR IF YOU ARE NOT THE CUSTOMER, AS A REPRESENTATIVE/AGENT AUTHORIZED TO BIND THE CUSTOMER) CONSENT TO BE BOUND BY THIS AGREEMENT. IF YOU DO NOT OR CANNOT AGREE TO THE TERMS CONTAINED HEREIN, THEN (A) DO NOT DOWNLOAD, INSTALL, OR USE THE SOFTWARE, AND (B) YOU MAY CONTACT JUNIPER NETWORKS REGARDING LICENSE TERMS.

1. **The Parties.** The parties to this Agreement are Juniper Networks, Inc. and its subsidiaries (collectively "Juniper"), and the person or organization that originally purchased from Juniper or an authorized Juniper reseller the applicable license(s) for use of the Software ("Customer") (collectively, the "Parties").

2. **The Software.** In this Agreement, "Software" means the program modules and features of the Juniper or Juniper-supplied software, and updates and releases of such software, for which Customer has paid the applicable license or support fees to Juniper or an authorized Juniper reseller. "Embedded Software" means Software which Juniper has embedded in the Juniper equipment.

3. **License Grant.** Subject to payment of the applicable fees and the limitations and restrictions set forth herein, Juniper grants to Customer a non-exclusive and non-transferable license, without right to sublicense, to use the Software, in executable form only, subject to the following use restrictions:

a. Customer shall use the Embedded Software solely as embedded in, and for execution on, Juniper equipment originally purchased by Customer from Juniper or an authorized Juniper reseller.

b. Customer shall use the Software on a single hardware chassis having a single processing unit, or as many chassis or processing units for which Customer has paid the applicable license fees; provided, however, with respect to the Steel-Belted Radius or Odyssey Access Client software only, Customer shall use such Software on a single computer containing a single physical random access memory space and containing any number of processors. Use of the Steel-Belted Radius software on multiple computers requires multiple licenses, regardless of whether such computers are physically contained on a single chassis.

c. Product purchase documents, paper or electronic user documentation, and/or the particular licenses purchased by Customer may specify limits to Customer's use of the Software. Such limits may restrict use to a maximum number of seats, registered endpoints, concurrent users, sessions, calls, connections, subscribers, clusters, nodes, realms, devices, links, ports or transactions, or require the purchase of separate licenses to use particular features, functionalities, services, applications, operations, or capabilities, or provide throughput, performance, configuration, bandwidth, interface, processing, temporal, or geographical limits. In addition, such limits may restrict the use of the Software to managing certain kinds of networks or require the Software to be used only in conjunction with other specific Software. Customer's use of the Software shall be subject to all such limitations and purchase of all applicable licenses.

d. For any trial copy of the Software, Customer's right to use the Software expires 30 days after download, installation or use of the Software. Customer may operate the Software after the 30-day trial period only if Customer pays for a license to do so. Customer may not extend or create an additional trial period by re-installing the Software after the 30-day trial period.

e. The Global Enterprise Edition of the Steel-Belted Radius software may be used by Customer only to manage access to Customer's enterprise network. Specifically, service provider customers are expressly prohibited from using the Global Enterprise Edition of the Steel-Belted Radius software to support any commercial network access services.

The foregoing license is not transferable or assignable by Customer. No license is granted herein to any user who did not originally purchase the applicable license(s) for the Software from Juniper or an authorized Juniper reseller.

4. **Use Prohibitions.** Notwithstanding the foregoing, the license provided herein does not permit the Customer to, and Customer agrees not to and shall not: (a) modify, unbundle, reverse engineer, or create derivative works based on the Software; (b) make unauthorized copies of the Software (except as necessary for backup purposes); (c) rent, sell, transfer, or grant any rights in and to any copy of the Software, in any form, to any third party; (d) remove any proprietary notices, labels, or marks on or in any copy of the Software or any product in which the Software is embedded; (e) distribute any copy of the Software to any third party, including as may be embedded in Juniper equipment sold in the secondhand market; (f) use any 'locked' or key-restricted feature, function, service, application, operation, or capability without first purchasing the applicable license(s) and obtaining a valid key from Juniper, even if such feature, function, service, application, operation, or capability is enabled without a key; (g) distribute any key for the Software provided by Juniper to any third party; (h) use the Software in any manner that extends or is broader than the uses purchased by Customer from Juniper or an authorized Juniper reseller; (i) use the Embedded Software on non-Juniper equipment; (j) use the Software (or make it available for use) on Juniper equipment that the Customer did not originally purchase from Juniper or an authorized Juniper reseller; (k) disclose the results of testing or benchmarking of the Software to any third party without the prior written consent of Juniper; or (l) use the Software in any manner other than as expressly provided herein.

5. **Audit.** Customer shall maintain accurate records as necessary to verify compliance with this Agreement. Upon request by Juniper, Customer shall furnish such records to Juniper and certify its compliance with this Agreement.

6. **Confidentiality.** The Parties agree that aspects of the Software and associated documentation are the confidential property of Juniper. As such, Customer shall exercise all reasonable commercial efforts to maintain the Software and associated documentation in confidence, which at a minimum includes restricting access to the Software to Customer employees and contractors having a need to use the Software for Customer's internal business purposes.

7. **Ownership.** Juniper and Juniper's licensors, respectively, retain ownership of all right, title, and interest (including copyright) in and to the Software, associated documentation, and all copies of the Software. Nothing in this Agreement constitutes a transfer or conveyance of any right, title, or interest in the Software or associated documentation, or a sale of the Software, associated documentation, or copies of the Software.

8. **Warranty, Limitation of Liability, Disclaimer of Warranty.** The warranty applicable to the Software shall be as set forth in the warranty statement that accompanies the Software (the "Warranty Statement"). Nothing in this Agreement shall give rise to any obligation to support the Software. Support services may be purchased separately. Any such support shall be governed by a separate, written support services agreement. TO THE MAXIMUM EXTENT PERMITTED BY LAW, JUNIPER SHALL NOT BE LIABLE FOR ANY LOST PROFITS, LOSS OF DATA, OR COSTS OR PROCUREMENT OF SUBSTITUTE GOODS OR SERVICES, OR FOR ANY SPECIAL, INDIRECT, OR CONSEQUENTIAL DAMAGES ARISING OUT OF THIS AGREEMENT, THE SOFTWARE, OR ANY JUNIPER OR JUNIPER-SUPPLIED SOFTWARE. IN NO EVENT SHALL JUNIPER BE LIABLE FOR DAMAGES ARISING FROM UNAUTHORIZED OR IMPROPER USE OF ANY JUNIPER OR JUNIPER-SUPPLIED SOFTWARE. EXCEPT AS EXPRESSLY PROVIDED IN THE WARRANTY STATEMENT TO THE EXTENT PERMITTED BY LAW, JUNIPER DISCLAIMS ANY AND ALL WARRANTIES IN AND TO THE SOFTWARE (WHETHER EXPRESS, IMPLIED, STATUTORY, OR OTHERWISE), INCLUDING ANY IMPLIED WARRANTY OF MERCHANTABILITY, FITNESS FOR A PARTICULAR PURPOSE, OR NONINFRINGEMENT. IN NO EVENT DOES JUNIPER WARRANT THAT THE SOFTWARE, OR ANY EQUIPMENT OR NETWORK RUNNING THE SOFTWARE, WILL OPERATE WITHOUT ERROR OR INTERRUPTION, OR WILL BE FREE OF VULNERABILITY TO INTRUSION OR ATTACK. In no event shall Juniper's or its suppliers' or licensors' liability to Customer, whether in contract, tort (including negligence), breach of warranty, or otherwise, exceed the price paid by Customer for the Software that gave rise to the claim, or if the Software is embedded in another Juniper product, the price paid by Customer for such other product. Customer acknowledges and agrees that Juniper has set its prices and entered into this Agreement in reliance upon the disclaimers of warranty and the limitations of liability set forth herein, that the same reflect an allocation of risk between the Parties (including the risk that a contract remedy may fail of its essential purpose and cause consequential loss), and that the same form an essential basis of the bargain between the Parties.

9. **Termination.** Any breach of this Agreement or failure by Customer to pay any applicable fees due shall result in automatic termination of the license granted herein. Upon such termination, Customer shall destroy or return to Juniper all copies of the Software and related documentation in Customer's possession or control.

10. **Taxes.** All license fees for the Software are exclusive of taxes, withholdings, duties, or levies (collectively "Taxes"). Customer shall be responsible for paying Taxes arising from the purchase of the license, or importation or use of the Software.

11. **Export.** Customer agrees to comply with all applicable export laws and restrictions and regulations of any United States and any applicable foreign agency or authority, and not to export or re-export the Software or any direct product thereof in violation of any such restrictions, laws or regulations, or without all necessary approvals. Customer shall be liable for any such violations. The version of the Software supplied to Customer may contain encryption or other capabilities restricting Customer's ability to export the Software without an export license.

12. **Commercial Computer Software.** The Software is "commercial computer software" and is provided with restricted rights. Use, duplication, or disclosure by the United States government is subject to restrictions set forth in this Agreement and as provided in DFARS 227.7201 through 227.7202-4, FAR 12.212, FAR 27.405(b)(2), FAR 52.227-19, or FAR 52.227-14(ALT III) as applicable.

13. **Interface Information.** To the extent required by applicable law, and at Customer's written request, Juniper shall provide Customer with the interface information needed to achieve interoperability between the Software and another independently created program, on payment of applicable fee, if any. Customer shall observe strict obligations of confidentiality with respect to such information and shall use such information in compliance with any applicable terms and conditions upon which Juniper makes such information available.

14. **Third Party Software.** Any licensor of Juniper whose software is embedded in the Software and any supplier of Juniper whose products or technology are embedded in (or services are accessed by) the Software shall be a third party beneficiary with respect to this Agreement, and such licensor or vendor shall have the right to enforce this Agreement in its own name as if it were Juniper. In addition, certain third party software may be provided with the Software and is subject to the accompanying license(s), if any, of its respective owner(s). To the extent portions of the Software are distributed under and subject to open source licenses obligating Juniper to make the source code for such portions publicly available (such as the GNU General Public License ("GPL") or the GNU Library General Public License ("LGPL")), Juniper will make such source code portions (including Juniper modifications, as appropriate) available upon request for a period of up to three years from the date of distribution. Such request can be made in writing to Juniper Networks, Inc., 1194 N. Mathilda Ave., Sunnyvale, CA 94089, ATTN: General Counsel. You may obtain a copy of the GPL at http://www.gnu.org/licenses/gpl.html, and a copy of the LGPL at http://www.gnu.org/licenses/lgpl.html.

15. **Miscellaneous.** This Agreement shall be governed by the laws of the State of California without reference to its conflicts of laws principles. The provisions of the U.N. Convention for the International Sale of Goods shall not apply to this Agreement. For any disputes arising under this Agreement, the Parties hereby consent to the personal and exclusive jurisdiction of, and venue in, the state and federal courts within Santa Clara County, California. This Agreement constitutes the entire and sole agreement between Juniper and the Customer with respect to the Software, and supersedes all prior and contemporaneous agreements relating to the Software, whether oral or written (including any inconsistent terms contained in a purchase order), except that the terms of a separate written agreement executed by an authorized Juniper representative and Customer shall govern to the extent such terms are inconsistent or conflict with terms contained herein. No modification to this Agreement nor any waiver of any rights hereunder shall be effective unless expressly assented to in writing by the party to be charged. If any portion of this Agreement is held invalid, the Parties agree that such invalidity shall not affect the validity of the remainder of this Agreement. This Agreement and associated documentation has been written in the English language, and the Parties agree that the English version will govern. (For Canada: Les parties aux présentés confirment leur volonté que cette convention de même que tous les documents y compris tout avis qui s'y rattaché, soient redigés en langue anglaise. (Translation: The parties confirm that this Agreement and all related documentation is and will be in the English language)).

Abbreviated Table of Contents

		About This Guide	xv
Part 1		**J-series Overview**	
	Chapter 1	Overview of Services Routers	3
	Chapter 2	System Overview	13
	Chapter 3	PIM and VoIP Module Overview	43
	Chapter 4	Services Router User Interface Overview	83
Part 2		**Installing a Services Router**	
	Chapter 5	Preparing for Router Installation	105
	Chapter 6	Installing and Connecting a Services Router	119
	Chapter 7	Establishing Basic Connectivity	133
	Chapter 8	Configuring Secure Web Access	155
	Chapter 9	Installing and Managing J-series Licenses	163
Part 3		**Maintaining Services Router Hardware**	
	Chapter 10	Replacing Hardware Components	175
	Chapter 11	Troubleshooting Hardware Components	213
	Chapter 12	Contacting Customer Support and Returning Hardware	217
Part 4		**J-series Requirements and Specifications**	
	Chapter 13	Network Cable Specifications and Connector Pinouts	227
	Chapter 14	Safety and Regulatory Compliance Information	251
Part 5		**Index**	
		Index	297

Table of Contents

About This Guide xv

Objectives xv
Audience xv
How to Use This Guide xvi
Document Conventions xvii
Related Juniper Networks Documentation xviii
Documentation Feedback xxi
Requesting Support xxi

Part 1 J-series Overview

Chapter 1 Overview of Services Routers 3

J2320 Services Router Overview 4
J2350 Services Router Overview 4
J4350 Services Router Overview 5
J6350 Services Router Overview 6
J-series Software Features and Licenses 7

Chapter 2 System Overview 13

J2320 and J2350 Services Router Hardware Features 13
- J2320 and J2350 Chassis 14
- J2320 and J2350 Midplane 18
- J2320 and J2350 Routing Engine Hardware 18
- J2320 and J2350 Boot Devices 19
- J2320 and J2350 Front Panel 19
  - Physical Interface Modules (PIMs) 20
  - Power Button and POWER LED 20
  - STATUS LED 21
  - ALARM LED 21
  - HA LED 22
  - RESET CONFIG Button 22
  - Built-In Gigabit Ethernet Ports 23
  - Console Port 23
  - AUX Port 23
  - USB Port 24
- J2320 and J2350 External Compact Flashes 24

J2320 Power System 24
J2350 Power System 24
J2320 and J2350 Cooling System 25
J4350 and J6350 Services Router Hardware Features 26
J4350 and J6350 Chassis 27
J4350 and J6350 Midplane 31
J4350 and J6350 Routing Engine Hardware 31
J4350 and J6350 Boot Devices 31
J4350 and J6350 Front Panel 32
Physical Interface Modules (PIMs) 32
Power Button and POWER LED 33
STATUS LED 34
ALARM LED 34
HA LED 35
RESET CONFIG Button 35
Built-In Gigabit Ethernet Ports 35
Console Port 36
AUX Port 36
USB Port 36
J4350 Power System 36
J6350 Power System 37
J4350 and J6350 Cooling System 38
Software Overview 39
Routing Engine and Packet Forwarding Engine 40
Kernel and Microkernel 40
JUNOS Software Processes 40
User Interfaces 41

Chapter 3 PIM and VoIP Module Overview 43

PIM and VoIP Module Terms 44
Field-Replaceable PIMs 46
J2320 and J2350 Field-Replaceable PIM Summary 46
J4350 and J6350 Field-Replaceable PIM Summary 47
1-Port, 6-Port, 8-Port, and 16-Port Gigabit Ethernet uPIMs 49
1-Port Gigabit Ethernet ePIMs 52
Dual-Port Serial PIM 55
Dual-Port T1 or E1 PIM 56
Dual-Port Channelized T1/E1/ISDN PRI PIM 57
T3 or E3 PIM 59
Dual-Port Fast Ethernet PIM 61
4-Port Fast Ethernet ePIM 62
4-Port ISDN BRI PIMs 63
ADSL PIM 64
G.SHDSL PIM 66
Avaya VoIP Modules 67
Avaya VoIP Module Summary 68
TGM550 Telephony Gateway Module 70
TIM508 Analog Telephony Interface Module 74
TIM510 E1/T1 Telephony Interface Module 75

TIM514 Analog Telephony Interface Module 77
TIM516 Analog Telephony Interface Module 78
TIM518 Analog Telephony Interface Module 79
TIM521 BRI Telephony Interface Module 81

Chapter 4 Services Router User Interface Overview 83

User Interface Overview 83
J-Web Overview 83
CLI Overview 84
Before You Begin 85
Using the J-Web Interface 85
Starting the J-Web Interface 85
J-Web Layout 86
Elements of the J-Web Interface 87
Top Pane Elements 87
Main Pane Elements 88
Side Pane Elements 89
Navigating the J-Web Interface 90
Navigating the Quick Configuration Pages 91
Navigating the J-Web Configuration Editor 91
Getting J-Web Help 92
J-Web Sessions 93
Using the Command-Line Interface 94
CLI Command Hierarchy 94
Starting the CLI 95
CLI Operational Mode 95
CLI Configuration Mode 96
CLI Basics 97
Editing Keystrokes 97
Command Completion 98
Online Help 99
Configuring the CLI Environment 100

Part 2 Installing a Services Router

Chapter 5 Preparing for Router Installation 105

General Site Guidelines 105
Rack Requirements 106
Rack Size and Strength for J2320 and J2350 Routers 106
Rack Size and Strength for J4350 and J6350 Routers 107
Connection to Building Structure 107
Router Environmental Tolerances 108
Fire Safety Requirements 108
Fire Suppression 108
Fire Suppression Equipment 109

Power Guidelines, Requirements, and Specifications 109
Site Electrical Wiring Guidelines 110
Signaling Limitations 110
Radio Frequency Interference 110
Electromagnetic Compatibility 110
Router Power Requirements 111
AC Power, Connection, and Power Cord Specifications 111
DC Power, Connection, and Power Cable Specifications 113
Planning for Power Management 114
Network Cable Specifications 117
ISDN Provisioning 117
Site Preparation Checklist 117

Chapter 6 Installing and Connecting a Services Router 119

Before You Begin 119
Unpacking a J-series Services Router 120
Installing J2320 and J2350 Routers 121
Installing J4350 and J6350 Routers 122
Connecting Interface Cables to Services Routers 125
Chassis Grounding 125
Connecting Power 126
Connecting AC Power 126
Connecting DC Power 128
Powering a Services Router On and Off 131

Chapter 7 Establishing Basic Connectivity 133

Basic Connectivity Terms 133
Basic Connectivity Overview 134
Router Identification 134
Root Password 135
Time Zone and System Time 135
Network Settings 136
Default Gateway 136
Backup Router 136
Loopback Address 136
Built-In Ethernet Interface Address 137
Management Access 137
Before You Begin 138
Connecting to a Services Router 139
Connecting to the J-Web Interface 139
Connecting to the CLI Locally 141
Connecting to the CLI Remotely 143
Configuring the Modem at the Router End 143
Connecting the Modem to the Console Port 144
Connecting to the CLI at the User End 145
Configuring Basic Settings with J-Web Quick Configuration 145

Configuring Basic Settings with a Configuration Editor 149
Verifying Basic Connectivity 152
Displaying Basic Connectivity Configurations 152

Chapter 8 Configuring Secure Web Access 155

Secure Web Access Terms 155
Secure Web Access Overview 156
Before You Begin 156
Generating SSL Certificates 157
Configuring Secure Web Access 157
Configuring Secure Web Access with a Configuration Editor 160
Verifying Secure Web Access 161
Displaying an SSL Certificate Configuration 161
Displaying a Secure Access Configuration 162

Chapter 9 Installing and Managing J-series Licenses 163

J-series License Overview 163
Software Feature Licenses 163
License Key Components 164
Before You Begin 164
Managing J-series Licenses with the J-Web Interface 165
Adding New Licenses with the J-Web Interface 166
Deleting Licenses with the J-Web Interface 167
Displaying License Keys with the J-Web Interface 167
Downloading Licenses with the J-Web Interface 167
Managing J-series Licenses with the CLI 167
Adding New Licenses with the CLI 167
Deleting a License with the CLI 168
Saving License Keys with the CLI 168
Verifying J-series License Management 169
Displaying Installed Licenses 169
Displaying License Usage 170
Displaying Installed License Keys 170

Part 3 Maintaining Services Router Hardware

Chapter 10 Replacing Hardware Components 175

Tools and Parts Required 175
Replacing the Console Port Cable 176
Replacing a PIM 176
Removing a PIM 176
Installing a PIM 178

Replacing PIM Cables 179
Removing PIM Cables 179
Installing PIM Cables 179
Removing and Replacing the Chassis Cover on J2320 and J2350 Routers 180
Replacing Internal Compact Flashes on J2320 and J2350 Routers 182
Replacing Internal Compact Flashes on J4350 and J6350 Routers 185
Replacing External Compact Flashes 188
Replacing USB Storage Devices 190
Removing the USB Storage Device 190
Installing the USB Storage Device 191
Replacing DRAM Modules 192
Removing a DRAM Module 193
Installing a DRAM Module 194
Replacing Power System Components 195
Replacing AC Power Supply Cords 195
Removing an AC Power Supply from J6350 Routers 196
Installing an AC Power Supply in J6350 Routers 197
Replacing DC Power Supply Cables 198
Removing a DC Power Supply 199
Installing a DC Power Supply 200
Replacing Crypto Accelerator Modules on J2320 and J2350 Routers 202
Removing a J2320 or J2350 Crypto Accelerator Module 203
Installing a J2320 or J2350 Crypto Accelerator Module 204
Replacing Crypto Accelerator Modules on J4350 and J6350 Routers 205
Removing a J4350 or J6350 Crypto Accelerator Module 206
Installing a J4350 or j6350 Crypto Accelerator Module 207
Replacing Air Filters on J2350 Routers 209
Replacing Air Filters on J4350 and J6350 Routers 210

Chapter 11 Troubleshooting Hardware Components 213

Chassis Alarm Conditions 213
Troubleshooting Power Management 214
Contacting the Juniper Networks Technical Assistance Center 216

Chapter 12 Contacting Customer Support and Returning Hardware 217

Locating Component Serial Numbers 217
J2320 and J2350 Chassis Serial Number and Agency Labels 218
J4350 and J6350 Chassis Serial Number and Agency Labels 219
PIM Serial Number Label 220
Power Supply Serial Number Labels 220
Contacting Customer Support 220
Information You Might Need to Supply to JTAC 221
Return Procedure 221
Packing a Router or Component for Shipment 222
Tools and Parts Required 222
Packing the Services Router for Shipment 222
Packing Components for Shipment 223

Part 4 J-series Requirements and Specifications

Chapter 13 Network Cable Specifications and Connector Pinouts 227

Serial PIM Cable Specifications 227
RS-232 DTE Cable Pinout 228
RS-232 DCE Cable Pinout 229
RS-422/449 (EIA-449) DTE Cable Pinout 229
RS-422/449 (EIA-449) DCE Cable Pinout 231
EIA-530A DTE Cable Pinout 232
EIA-530A DCE Cable Pinout 233
V.35 DTE Cable Pinout 234
V.35 DCE Cable Pinout 235
X.21 DTE Cable Pinout 235
X.21 DCE Cable Pinout 236
Fast Ethernet RJ-45 Connector Pinout 237
Gigabit Ethernet uPIM RJ-45 Connector Pinout 237
Gigabit Ethernet ePIM RJ-45 Connector Pinout 238
Chassis Console Port Pinouts 238
E1 and T1 RJ-48 Cable Pinouts 239
E3 and T3 BNC Connector Pinout 242
ADSL and G.SHDSL RJ-11 Connector Pinout 242
ISDN RJ-45 Connector Pinout 243
Connector Pinouts for Avaya VoIP Modules 243
TGM550 Console Port Pinouts 244
TGM550 RJ-11 Connector Pinout for Analog Ports 244
TIM508 Connector Pinout 245
TIM510 RJ-45 Connector Pinout 245
TIM514 Connector Pinout 246
TIM516 Connector Pinout 246
TIM518 Connector Pinout 248
TIM521 Connector Pinout 249

Chapter 14 Safety and Regulatory Compliance Information 251

Definition of Safety Warning Levels 251
Safety Guidelines and Warnings 253
General Safety Guidelines and Warnings 253
Qualified Personnel Warning 254
Preventing Electrostatic Discharge Damage 255
Electrical Safety Guidelines and Warnings 256
General Electrical Safety Guidelines 256
AC Power Electrical Safety Guidelines 258
DC Power Electrical Safety Guidelines 259
Power Sources for Redundant Power Supplies 260
DC Power Disconnection Warning 260
DC Power Grounding Requirements and Warning 261
DC Power Wiring Sequence Warning 262
DC Power Wiring Terminations Warning 264

Grounded Equipment Warning 265
Warning Statement for Norway and Sweden 266
In Case of Electrical Accident 266
Multiple Power Supplies Disconnection Warning 266
Power Disconnection Warning 267
TN Power Warning 268
Telecommunication Line Cord Warning 269
Installation Safety Guidelines and Warnings 270
Chassis Lifting Guidelines 271
Installation Instructions Warning 271
Rack-Mounting Requirements and Warnings 272
Ramp Warning 276
Laser and LED Safety Guidelines and Warnings 276
General Laser Safety Guidelines 276
Class 1 Laser Product Warning 277
Class 1 LED Product Warning 277
Laser Beam Warning 278
Radiation from Open Port Apertures Warning 279
Maintenance and Operational Safety Guidelines and Warnings 280
Battery Handling Warning 280
Jewelry Removal Warning 282
Lightning Activity Warning 283
Operating Temperature Warning 284
Product Disposal Warning 286
Agency Approvals 287
Compliance Statements for Environmental Requirements 288
Lithium Battery 288
Compliance Statements for NEBS 288
Compliance Statements for EMC Requirements 288
Canada 288
European Community 290
Japan 291
United States 292
FCC Part 15 Statement 292
FCC Part 68 Statement 292

Part 5 Index

Index 297

About This Guide

This preface provides the following guidelines for using the *J2320, J2350, J4350, and J6350 Services Router Getting Started Guide*:

- Objectives on page xv
- Audience on page xv
- How to Use This Guide on page xvi
- Document Conventions on page xvii
- Related Juniper Networks Documentation on page xviii
- Documentation Feedback on page xxi
- Requesting Support on page xxi

Objectives

This guide contains an overview, basic instructions, and specifications for J2320, J2350, J4350, and J6350 Services Routers. It explains how to prepare your site for installation, unpack and install a Services Router and its components, power on the router, install licenses, and establish basic connectivity.

J-series Services Router operations are controlled by the JUNOS software. You direct the JUNOS software through either a Web browser or a command-line interface (CLI).



NOTE: This guide documents Release 8.5 of the JUNOS software. For additional information about J-series Services Routers—either corrections to or omissions from this guide—see the *J-series Services Router Release Notes* at http://www.juniper.net.

Audience

This guide is designed for anyone who installs and sets up a J-series Services Router or prepares a site for Services Router installation. The guide is intended for the following audiences:

- Customers with technical knowledge of and experience with networks and the Internet
- Network administrators who install, configure, and manage Internet routers but are unfamiliar with the JUNOS software

- Network administrators who install, configure, and manage products of Juniper Networks

Personnel operating the equipment must be trained and competent; must not conduct themselves in a careless, willfully negligent, or hostile manner; and must abide by the instructions provided by the documentation.

How to Use This Guide

J-series documentation explains how to install, configure, and manage J-series routers by providing information about JUNOS implementation specifically on J-series routers. (For comprehensive JUNOS information, see the JUNOS software manuals listed in "Related Juniper Networks Documentation" on page xviii.) Table 1 on page xvi shows the location of J-series information, by task type, in Juniper Networks documentation.

Table 1: Location of J-series Information

J-series Tasks	Location of Instruction
Installing hardware and establishing basic connectivity	Getting Started Guide for your router
Configuring interfaces and routing protocols such as RIP, OSPF, BGP, and IS-IS	*J-series Services Router Basic LAN and WAN Access Configuration Guide*
Configuring advanced features such as virtual private networks (VPNs), IP Security (IPSec), multicast, routing policies, firewall filters, and class of service (CoS)	*J-series Services Router Advanced WAN Access Configuration Guide*
Managing users and operations, monitoring performance, upgrading software, and diagnosing common problems	*J-series Services Router Administration Guide*
Using the J-Web interface	*J-Web Interface User Guide*
Using the CLI	*JUNOS CLI User Guide*

Typically, J-series documentation provides both general and specific information—for example, a configuration overview, configuration examples, and verification methods. Because you can configure and manage J-series routers in several ways, you can choose from multiple sets of instructions to perform a task. To make best use of this information:

- *If you are new to the topic*—Read through the initial overview information, keep the related JUNOS guide handy for details about the JUNOS hierarchy, and follow the step-by-step instructions for your preferred interface.
- *If you are already familiar with the feature*—Go directly to the instructions for the interface of your choice, and follow the instructions. You can choose a J-Web method, the JUNOS CLI, or a combination of methods based on the level of complexity or your familiarity with the interface.

For many J-series features, you can use J-Web Quick Configuration pages to configure the router quickly and easily without configuring each statement individually. For

more extensive configuration, use the J-Web configuration editor or CLI configuration mode commands.

To monitor, diagnose, and manage a router, use the J-Web interface or CLI operational mode commands.

Document Conventions

Table 2 on page xvii defines the notice icons used in this guide.

Table 2: Notice Icons

Icon	Meaning	Description
	Informational note	Indicates important features or instructions.
	Caution	Indicates a situation that might result in loss of data or hardware damage.
	Warning	Alerts you to the risk of personal injury or death.
	Laser warning	Alerts you to the risk of personal injury from a laser.

Table 3 on page xvii defines the text and syntax conventions used in this guide.

Table 3: Text and Syntax Conventions

Convention	Description	Examples
Bold text like this	Represents text that you type.	To enter configuration mode, type the **configure** command: user@host> **configure**
`Fixed-width text like this`	Represents output that appears on the terminal screen.	`user@host> show chassis alarms` `No alarms currently active`
Italic text like this	■ Introduces important new terms. ■ Identifies book names. ■ Identifies RFC and Internet draft titles.	■ A policy *term* is a named structure that defines match conditions and actions. ■ *JUNOS System Basics Configuration Guide* ■ RFC 1997, *BGP Communities Attribute*

Table 3: Text and Syntax Conventions *(continued)*

Convention	Description	Examples
Italic text like this	Represents variables (options for which you substitute a value) in commands or configuration statements.	Configure the machine's domain name: [edit] root@# **set system domain-name** *domain-name*
Plain text like this	Represents names of configuration statements, commands, files, and directories; IP addresses; configuration hierarchy levels; or labels on routing platform components.	■ To configure a stub area, include the stub statement at the [edit protocols ospf area area-id] hierarchy level. ■ The console port is labeled CONSOLE.
< > (angle brackets)	Enclose optional keywords or variables.	stub <default-metric *metric*>;
| (pipe symbol)	Indicates a choice between the mutually exclusive keywords or variables on either side of the symbol. The set of choices is often enclosed in parentheses for clarity.	broadcast | multicast (*string1* | *string2* | *string3*)
# (pound sign)	Indicates a comment specified on the same line as the configuration statement to which it applies.	rsvp { # Required for dynamic MPLS only
[ ] (square brackets)	Enclose a variable for which you can substitute one or more values.	community name members [*community-ids*]

Indention and braces ({ })	Identify a level in the configuration hierarchy.	[edit]
		routing-options {
		static {
		route default {
		nexthop *address*;
		retain;
		}
		}
		}

; (semicolon)	Identifies a leaf statement at a configuration hierarchy level.	
J-Web GUI Conventions		
Bold text like this	Represents J-Web graphical user interface (GUI) items you click or select.	■ In the Logical Interfaces box, select **All Interfaces**. ■ To cancel the configuration, click **Cancel**.
> (bold right angle bracket)	Separates levels in a hierarchy of J-Web selections.	In the configuration editor hierarchy, select **Protocols > Ospf**.

Related Juniper Networks Documentation

J-series Services Routers are documented in multiple guides. Although the J-series guides provide instructions for configuring and managing a Services Router with the JUNOS CLI, they are not a comprehensive JUNOS software resource. For complete

documentation of the statements and commands described in J-series guides, see the JUNOS software manuals listed in Table 4 on page xix.

Table 4: J-series Guides and Related JUNOS Software Publications

Chapter in a J-series Guide	Corresponding JUNOS Software Manual
Getting Started Guide for Your Router	
"Services Router User Interface Overview" "Establishing Basic Connectivity"	■ *JUNOS CLI User Guide* ■ *JUNOS System Basics Configuration Guide*
J-series Services Router Basic LAN and WAN Access Configuration Guide	
"Using Services Router Configuration Tools"	■ *JUNOS CLI User Guide* ■ *JUNOS System Basics Configuration Guide*
"Interfaces Overview" "Configuring DS1, DS3, Ethernet, and Serial Interfaces" "Configuring Channelized T1/E1/ISDN PRI Interfaces" "Configuring Digital Subscriber Line Interfaces "Configuring Point-to-Point Protocol over Ethernet" "Configuring ISDN"	■ *JUNOS Network Interfaces Configuration Guide* ■ *JUNOS Interfaces Command Reference*
"Configuring Link Services Interfaces"	■ *JUNOS Services Interfaces Configuration Guide* ■ *JUNOS System Basics and Services Command Reference*
"Configuring VoIP"	■ *JUNOS Network Interfaces Configuration Guide* ■ *JUNOS Interfaces Command Reference*
"Configuring uPIMs as Ethernet Switches"	■ *JUNOS Network Interfaces Configuration Guide* ■ *JUNOS System Basics Configuration Guide* ■ *JUNOS System Basics and Services Command Reference*
"Routing Overview" "Configuring Static Routes" "Configuring a RIP Network" "Configuring an OSPF Network" "Configuring the IS-IS Protocol" "Configuring BGP Sessions"	■ *JUNOS Routing Protocols Configuration Guide* ■ *JUNOS Routing Protocols and Policies Command Reference*
J-series Services Router Advanced WAN Access Configuration Guide	

Table 4: J-series Guides and Related JUNOS Software Publications *(continued)*

Chapter in a J-series Guide	Corresponding JUNOS Software Manual
"Multiprotocol Label Switching Overview" "Configuring Signaling Protocols for Traffic Engineering" "Configuring Virtual Private Networks" "Configuring CLNS VPNs"	■ *JUNOS MPLS Applications Configuration Guide* ■ *JUNOS Routing Protocols and Policies Command Reference* ■ *JUNOS VPNs Configuration Guide*
"Configuring IPSec for Secure Packet Exchange"	■ *JUNOS System Basics Configuration Guide* ■ *JUNOS Services Interfaces Configuration Guide* ■ *JUNOS System Basics and Services Command Reference*
"Multicast Overview" "Configuring a Multicast Network"	■ *JUNOS Multicast Protocols Configuration Guide* ■ *JUNOS Routing Protocols and Policies Command Reference*
"Configuring Data Link Switching"	■ *JUNOS Services Interfaces Configuration Guide* ■ *JUNOS System Basics and Services Command Reference*
"Policy Framework Overview" "Configuring Routing Policies"	■ *JUNOS Policy Framework Configuration Guide* ■ *JUNOS Routing Protocols and Policies Command Reference*
"Configuring NAT" "Configuring Stateful Firewall Filters and NAT" "Configuring Stateless Firewall Filters"	■ *JUNOS Network Interfaces Configuration Guide* ■ *JUNOS Policy Framework Configuration Guide* ■ *JUNOS Services Interfaces Configuration Guide* ■ *Secure Configuration Guide for Common Criteria and JUNOS-FIPS* ■ *JUNOS System Basics and Services Command Reference* ■ *JUNOS Routing Protocols and Policies Command Reference*
"Class-of-Service Overview" "Configuring Class of Service"	■ *JUNOS Class of Service Configuration Guide* ■ *JUNOS System Basics and Services Command Reference*
J-series Services Router Administration Guide	
"Managing User Authentication and Access"	■ *JUNOS System Basics Configuration Guide* ■ *Secure Configuration Guide for Common Criteria and JUNOS-FIPS*
"Configuring SNMP for Network Management"	*JUNOS Network Management Configuration Guide*
"Configuring the Router as a DHCP Server" "Configuring Autoinstallation"	*JUNOS System Basics Configuration Guide*
"Automating Network Operations and Troubleshooting"	*JUNOS Configuration and Diagnostic Automation Guide*

Table 4: J-series Guides and Related JUNOS Software Publications *(continued)*

Chapter in a J-series Guide	Corresponding JUNOS Software Manual
"Monitoring the Router and Routing Operations"	■ *JUNOS System Basics and Services Command Reference* ■ *JUNOS Interfaces Command Reference* ■ *JUNOS Routing Protocols and Policies Command Reference*
"Monitoring Events and Managing System Log Files"	■ *JUNOS System Log Messages Reference* ■ *Secure Configuration Guide for Common Criteria and JUNOS-FIPS*
"Configuring and Monitoring Alarms"	*JUNOS System Basics Configuration Guide*
"Performing Software Upgrades and Reboots"	*JUNOS Software Installation and Upgrade Guide*
"Using Services Router Diagnostic Tools"	■ *JUNOS System Basics and Services Command Reference* ■ *JUNOS Interfaces Command Reference* ■ *JUNOS Routing Protocols and Policies Command Reference*
"Configuring Packet Capture"	*JUNOS Services Interfaces Configuration Guide*
"Configuring RPM Probes"	*JUNOS System Basics and Services Command Reference*

Documentation Feedback

We encourage you to provide feedback, comments, and suggestions so that we can improve the documentation. You can send your comments to techpubs-comments@juniper.net, or fill out the documentation feedback form at http://www.juniper.net/techpubs/docbug/docbugreport.html. If you are using e-mail, be sure to include the following information with your comments:

- Document name
- Document part number
- Page number
- Software release version

Requesting Support

For technical support, open a support case with the Case Manager link at http://www.juniper.net/support/ or call 1-888-314-JTAC (from the United States, Canada, or Mexico) or 1-408-745-9500 (from elsewhere).

Part 1
J-series Overview

- Overview of Services Routers on page 3
- System Overview on page 13
- PIM and VoIP Module Overview on page 43
- Services Router User Interface Overview on page 83

Chapter 1

Overview of Services Routers

J-series Services Routers provide stable, reliable, and efficient IP routing, WAN and LAN connectivity, and management services for small to medium-sized enterprise networks. Services Routers typically connect small, branch, or regional offices to a central site router, and link Internet service provider (ISP) networks.

All J-series Services Routers run the JUNOS software, which offers many advanced routing and security services. For more information about software features, see "J-series Software Features and Licenses" on page 7. A single, common JUNOS code base simplifies deployment, patches, and software upgrades.

You can use two user interfaces to monitor, configure, troubleshoot, and manage a Services Router:

- J-Web interface—A Web-based graphical interface that allows you to operate a router without commands. The J-Web interface provides access to all JUNOS functionality and features. Quick Configuration wizards simplify basic configuration and minimize the risk of operator error.
- JUNOS command-line interface—A Juniper Networks command shell that runs on top of a UNIX-based operating system kernel. The CLI is a straightforward command interface. On a single line, you type commands that are executed when you press the Enter key. The CLI provides command Help and command completion.

For an introduction to the J-Web and CLI interfaces, see "Services Router User Interface Overview" on page 83. For more information, see the *J-Web Interface User Guide* and the *JUNOS CLI User Guide*.

This chapter contains the following topics:

- J2320 Services Router Overview on page 4
- J2350 Services Router Overview on page 4
- J4350 Services Router Overview on page 5
- J6350 Services Router Overview on page 6
- J-series Software Features and Licenses on page 7

J2320 Services Router Overview

The J2320 Services Router is primarily designed for remote or branch offices. It has a small chassis that is 1 U (rack unit) in size with a nonredundant AC power supply, an external compact flash and two universal serial bus (USB) ports for external storage, and an optional Crypto Accelerator Module.

J2320 routers ordered with the optional Crypto Accelerator Module come standard with 1 GB of memory, while those ordered without the Crypto Accelerator Module come standard with 256 MB of memory. The memory on J2320 routers can be upgraded to 1 GB. For instructions on upgrading memory, see "Replacing DRAM Modules" on page 192.

Each J2320 chassis contains four built-in Gigabit Ethernet ports with link speeds of 10/100/1000 Mbps over a copper interface. The chassis also contains three slots for field-replaceable Physical Interface Modules (PIMs) and Avaya voice over IP (VoIP) modules providing flexible WAN and voice connectivity options.

The J2320 Services Router supports the following field-replaceable PIMs and Avaya VoIP modules:

- Gigabit Ethernet uPIM (1-port, 6-port, 8-port, and 16-port)
- Dual-Port Serial PIM
- Dual-Port E1 PIM
- Dual-Port T1 PIM
- Dual-Port Channelized T1/E1/ISDN PRI PIM
- 4-port ISDN BRI S/T or U PIM
- ADSL 2/2 + Annex A PIM (1 port)
- ADSL 2/2 + Annex B PIM (1 port)
- G.SHDSL PIM (2 ports)
- TGM550 Telephony Gateway Module
- TIM508 Analog Telephony Interface Module (8 ports)
- TIM510 E1/T1 Telephony Interface Module (1 port)
- TIM514 Analog Telephony Interface Module (4 ports)
- TIM516 Analog Telephony Interface Module (16 ports)
- TIM518 Analog Telephony Interface Module (16 ports)
- TIM521 BRI Telephony Interface Module (4 ports)

J2350 Services Router Overview

The J2350 Services Router is primarily designed for regional or branch offices. It has a chassis that is 1.5 U (rack unit) in size with a nonredundant AC or DC power supply, an external compact flash and two universal serial bus (USB) ports for external storage, and an optional Crypto Accelerator Module.

J2350 routers ordered with the optional Crypto Accelerator Module come standard with 1 GB of memory, while those ordered without the Crypto Accelerator Module come standard with 256 MB of memory. The memory on J2350 routers can be upgraded to 1 GB. For instructions on upgrading memory, see “Replacing DRAM Modules” on page 192.

Each J2350 chassis contains four built-in Gigabit Ethernet ports with link speeds of 10/100/1000 Mbps over a copper interface. The chassis also contains five slots for field-replaceable Physical Interface Modules (PIMs) and Avaya VoIP modules providing flexible WAN and voice connectivity options.

The J2350 Services Router supports the following field-replaceable PIMs and Avaya VoIP modules:

- Gigabit Ethernet uPIM (1–port, 6-port, 8-port, and 16-port)
- Dual-Port Serial PIM
- Dual-Port E1 PIM
- Dual-Port T1 PIM
- Dual-Port Channelized T1/E1/ISDN PRI PIM
- 4-port ISDN BRI S/T or U PIM
- ADSL 2/2 + Annex A PIM (1 port)
- ADSL 2/2 + Annex B PIM (1 port)
- G.SHDSL PIM (2 ports)
- TGM550 Telephony Gateway Module
- TIM508 Analog Telephony Interface Module (8 ports)
- TIM510 E1/T1 Telephony Interface Module (1 port)
- TIM514 Analog Telephony Interface Module (4 ports)
- TIM516 Analog Telephony Interface Module (16 ports)
- TIM518 Analog Telephony Interface Module (16 ports)
- TIM521 ISDN BRI Telephony Interface Module (4 ports)

J4350 Services Router Overview

The J4350 Services Router is designed primarily for regional or branch offices. It has a chassis that is 2 U (rack units) in size with a nonredundant AC or DC power supply, and a universal serial bus (USB) port for external storage.

J4350 routers ordered with the optional Crypto Accelerator Module come standard with 1 GB of memory, while those ordered without the Crypto Accelerator Module come standard with 256 MB of memory. J4350 routers can contain between 256 MB and 2 GB of memory. For instructions on adding memory, see “Replacing DRAM Modules” on page 192.

Each J4350 chassis contains four built-in Gigabit Ethernet ports with link speeds of 10/100/1000 Mbps over a copper interface, and six slots for field-replaceable Physical

Interface Modules (PIMs) and Avaya VoIP modules. Two of the six slots (slots 3 and 6) support high-speed interfaces (ePIMs).

The J4350 Services Router supports the following field-replaceable PIMs and Avaya VoIP modules:

- Gigabit Ethernet uPIM (1-port, 6-port, 8-port, and 16-port)
- SFP Gigabit Ethernet ePIM (1 port)
- Copper Gigabit Ethernet ePIM (1 port)
- Dual-Port Serial PIM
- Dual-Port E1 PIM
- Dual-Port T1 PIM
- Dual-Port Channelized T1/E1/ISDN PRI PIM
- E3 PIM (1 port)
- DS3 (T3) PIM (1 port)
- Dual-Port Fast Ethernet PIM
- 4-port Fast Ethernet ePIM
- 4-port ISDN BRI S/T or U PIM
- ADSL 2/2 + Annex A PIM (1 port)
- ADSL 2/2 + Annex B PIM (1 port)
- G.SHDSL PIM (2 ports)
- TGM550 Telephony Gateway Module
- TIM508 Analog Telephony Interface Module (8 ports)
- TIM510 E1/T1 Telephony Interface Module (1 port)
- TIM514 Analog Telephony Interface Module (4 ports)
- TIM516 Analog Telephony Interface Module (16 ports)
- TIM518 Analog Telephony Interface Module (16 ports)
- TIM521 ISDN BRI Telephony Interface Module (4 ports)

J6350 Services Router Overview

The J6350 Services Router is designed primarily for regional or central offices. It has a chassis that is 2 U (rack units) in size with an optional redundant AC or DC power supply, up to 2 GB of memory, and two universal serial bus (USB) ports for external storage. The J6350 Services Router is a higher-performance system than the J4350 Services Router.

J6350 routers come standard with 1 GB of memory and can be upgraded to 2 GB of memory. For instructions on adding memory, see “Replacing DRAM Modules” on page 192.

Each J6350 chassis contains four built-in Gigabit Ethernet ports with link speeds of 10/100/1000 Mbps over a copper interface, and six slots for field-replaceable Physical Interface Modules (PIMs) and Avaya VoIP modules. Four of the six slots (slots 2, 3, 5, and 6) support high-speed interfaces (ePIMs).

The J6350 Services Router supports the following field-replaceable PIMs and Avaya VoIP modules:

- Gigabit Ethernet uPIM (1–port, 6-port, 8-port, and 16-port)
- SFP Gigabit Ethernet ePIM (1 port)
- Copper Gigabit Ethernet ePIM (1 port)
- ADSL 2/2 + Annex A PIM (1 port)
- ADSL 2/2 + Annex B PIM (1 port)
- Dual-Port E1 PIM
- E3 PIM (1 port)
- DS3 (T3) PIM (1 port)
- Dual-Port Fast Ethernet PIM
- Dual-Port Channelized T1/E1/ISDN PRI PIM
- 4-port Fast Ethernet ePIM
- G.SHDSL PIM (2 ports)
- 4-port ISDN BRI S/T or U PIM
- Dual-Port Serial PIM
- Dual-Port T1 PIM
- TGM550 Telephony Gateway Module
- TIM508 Analog Telephony Interface Module (8 ports)
- TIM510 E1/T1 Telephony Interface Module (1 port)
- TIM514 Analog Telephony Interface Module (4 ports)
- TIM516 Analog Telephony Interface Module (16 ports)
- TIM518 Analog Telephony Interface Module (16 ports)
- TIM521 ISDN BRI Telephony Interface Module (4 ports)

J-series Software Features and Licenses

J-series Services Routers provide the software features listed in Table 5 on page 8. You must purchase a separate software license to obtain some software features. For more information about licenses, see “Installing and Managing J-series Licenses” on page 163.

Table 5: Summary of J-series Features and License Requirements

Feature Category	J-series Feature	Separate License
Internet Protocols	IPv4	
	IPv6 routing and forwarding	
Routing and Multicast	Open Shortest Path First (OSPF)	
	Border Gateway Protocol (BGP)	License required for advanced BGP (route reflectors)
	Routing Information Protocol version 1 (RIPv1) and RIPv2	
	Static routes	
	Intermediate System-to-Intermediate System (IS-IS)	
	Connectionless Network Services (CLNS): ■ End system-to-Intermediate system (ES-IS) protocol ■ IS-IS extensions ■ BGP extensions ■ Static routes	

	Multiprotocol Label Switching (MPLS):
	■ Layer 2 and Layer 3 virtual private networks (VPNs)
	■ VPN routing and forwarding (VRF) table labels
	■ Traffic engineering protocols:
	  ■ Label Distribution Protocol (LDP)
	  ■ Resource Reservation Protocol (RSVP)	

	Multicast: ■ Internet Group Management Protocol (IGMP) ■ Protocol Independent Multicast (PIM) ■ Distance Vector Multicast Routing Protocol (DVMRP) ■ Single-source multicast	
IP Address Management	Static addresses	
	Dynamic Host Configuration Protocol (DHCP)	

Table 5: Summary of J-series Features and License Requirements *(continued)*

Feature Category	J-series Feature	Separate License
Encapsulation	Ethernet: ■ Media access control (MAC) encapsulation ■ 802.1p tagging ■ Point-to-Point Protocol over Ethernet (PPPoE) ■ Asynchronous Transfer Mode (ATM) for asymmetric digital subscriber line (ADSL) or symmetric high-speed digital subscriber line (SHDSL) ■ Circuit cross-connect (CCC) ■ Translational cross-connect (TCC)	
	Synchronous Point-to-Point Protocol (PPP)	
	Frame Relay	
	High-level Data Link Control (HDLC)	
	Serial encapsulation over RS-232, RS-449, X.21, V.35, and EIA-530 connections	
	802.1Q filtering and forwarding	
	Multilink Frame Relay	
	Multilink PPP	
	Data link switching (DLSw)	License required
Traffic Management	Policing and shaping	
	Class-based queuing with prioritization	
	Weighted random early detection (WRED)	
	Queuing by virtual LAN (VLAN), data link connection identifier (DLCI), interface, or bundle	
Ethernet Switching	Access switching provided by multiport Gigabit Ethernet uPIMs	

Table 5: Summary of J-series Features and License Requirements *(continued)*

Feature Category	J-series Feature	Separate License
Security	Common Criteria	
	Network attack detection	
	Denial-of-service (DoS) and distributed DoS protection	
	Generic routing encapsulation (GRE), IP-over-IP, and IP Security (IPSec) tunnels	
	Advanced Encryption Standard (AES) 128-, 192-, and 256-bit.	
	56-bit Data Encryption Standard (DES) and 168-bit 3DES encryption	
	MD5 and Secure Hash Algorithm (SHA-1) authentication	
	Replay attack prevention	
	Stateful firewall packet filters	
	Network Address Translation (NAT)	
Voice Support	Compressed Real-Time Transport Protocol (CRTP)	
	J2320, J2350, J4350, and J6350 Services Routers support voice over IP (VoIP) routing with the Avaya IG550 Integrated Gateway, which consists of modules that can be installed in the PIM slots.	
High Availability	Virtual Router Redundancy Protocol (VRRP)	
	Graceful restart according to IETF standards	
	Redundant interfaces	
System Management	JUNOScope network manager	
	J-Web browser interface—for Services Router configuration and management	
	JUNOScript XML application programming interface (API)	
	JUNOS command-line interface (CLI)—for Services Router configuration and management through the console, Telnet, SSH, or J-Web CLI terminal	
	Simple Network Management Protocol version 1 (SNMPv1) and SNMPv2	
Traffic Analysis	J-Flow flow monitoring and accounting	License required for J-Flow
	Packet capture (PCAP)	
	Real-time performance monitoring (RPM)	

Table 5: Summary of J-series Features and License Requirements *(continued)*

Feature Category	J-series Feature	Separate License
Activity Logging and Monitoring	System log	
	J-Web event viewer	
	Traceroute	
Administration	Supports the following external administrator databases: ■ RADIUS ■ TACACS+	
	Autoinstallation	
	Configuration rollback	
	Button-operated configuration rescue (CONFIG)	
	Confirmation of configuration changes	
	Software upgrades	
	Supports the following features for automating network operations and troubleshooting: ■ Commit scripts ■ Operation scripts ■ Event policies	

Chapter 2

System Overview

J-series J2320, J2350, J4350, and J6350 Services Routers have chassis that are similar but with important differences. J2320, J2350, and J4350 routers have a single nonredundant power supply and an optional Crypto Accelerator Module. J6350 routers have redundant power supplies and a standard Crypto Accelerator Module. For field-replaceable PIMs and Avaya VoIP modules, the J2320 has three slots, the J2350 has five slots, and the J4350 and J6350 have six slots. Of the six slots, two on the J4350 and four on the J6350 are enhanced (high-speed) slots.

All J-series routers run the JUNOS software.

This chapter contains the following topics:

- J2320 and J2350 Services Router Hardware Features on page 13
- J4350 and J6350 Services Router Hardware Features on page 26
- Software Overview on page 39

J2320 and J2350 Services Router Hardware Features

This section contains the following topics:

- J2320 and J2350 Chassis on page 14
- J2320 and J2350 Midplane on page 18
- J2320 and J2350 Routing Engine Hardware on page 18
- J2320 and J2350 Boot Devices on page 19
- J2320 and J2350 Front Panel on page 19
- J2320 and J2350 External Compact Flashes on page 24
- J2320 Power System on page 24
- J2350 Power System on page 24
- J2320 and J2350 Cooling System on page 25

J2320 and J2350 Chassis

The J2320 and J2350 chassis is a rigid sheet metal structure that houses all the other router components (see Figure 1 on page 14 through Figure 7 on page 17). The chassis can be installed in many types of racks or cabinets. For information about acceptable rack types, see "Rack Requirements" on page 106.

In addition to the components described in subsequent sections, the chassis includes the following components:

- Mounting brackets—One pair of metal brackets can be mounted at the front or center of the chassis for mounting the chassis in a rack or cabinet.
- Earthing terminal—A protective earthing terminal and a PEM nut at the rear of the chassis ensure safe dissipation of static electricity in all situations.
- ESD point—One electrostatic discharge (ESD) point, a banana plug receptacle at the front of the chassis, minimizes the risk of electrical discharge in potentially hazardous environments.

CAUTION: Before removing or installing components of a functioning router, attach an ESD strap to an ESD point and place the other end of the strap around your bare wrist. Failure to use an ESD strap could result in damage to the router.

The router must be connected to earth ground during normal operation. The protective earthing terminal on the rear of the chassis is provided to connect the router to ground (see Figure 3 on page 15). Additional grounding is provided to an AC-powered router when you plug its power supply into a grounded AC power receptacle.

For additional safety information, see "Safety and Regulatory Compliance Information" on page 251.

Figure 1: Front of J2320 Chassis

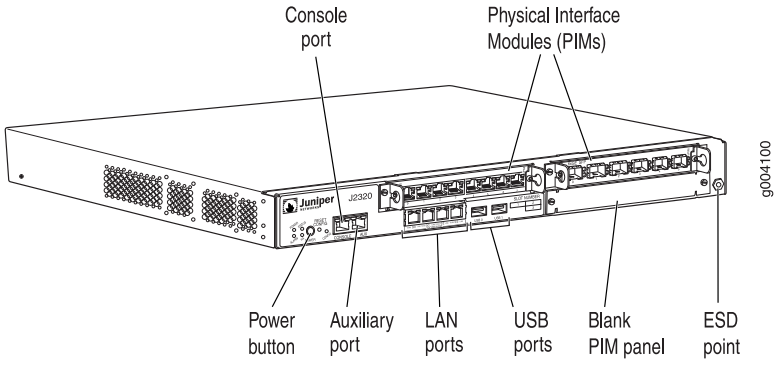

Figure 2: Front of J2350 Chassis

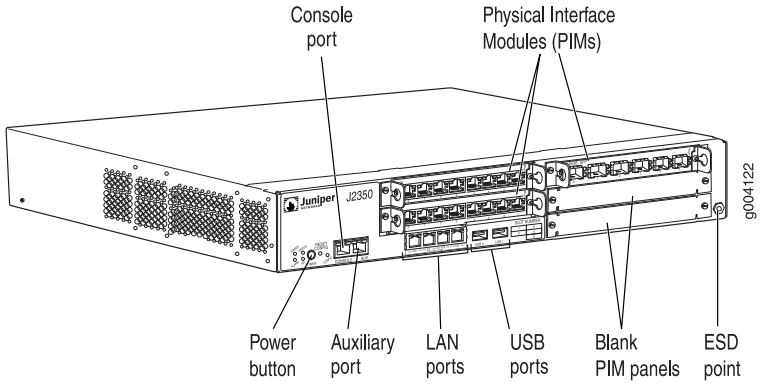

Figure 3: Rear of J2320 Chassis

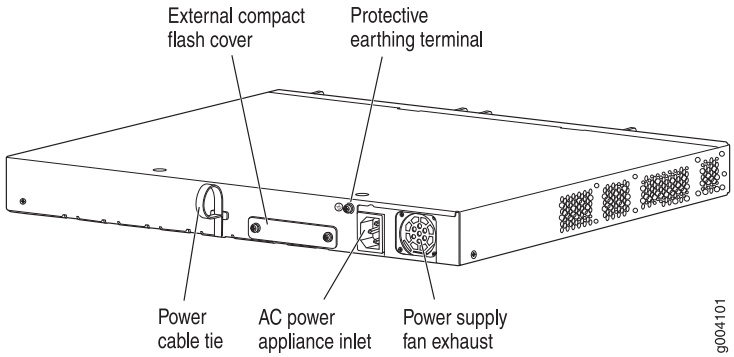

Figure 4: Rear of J2350 AC-Powered Chassis

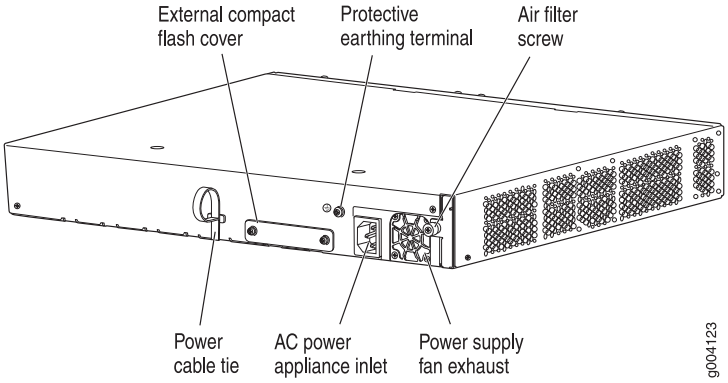

Figure 5: Rear of J2350 DC-Powered Chassis

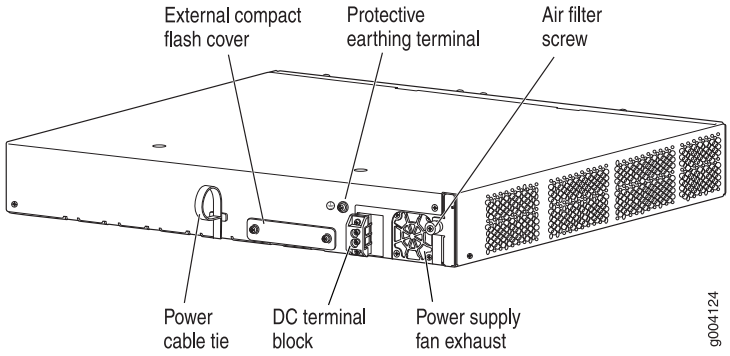

Figure 6: J2320 Hardware Components

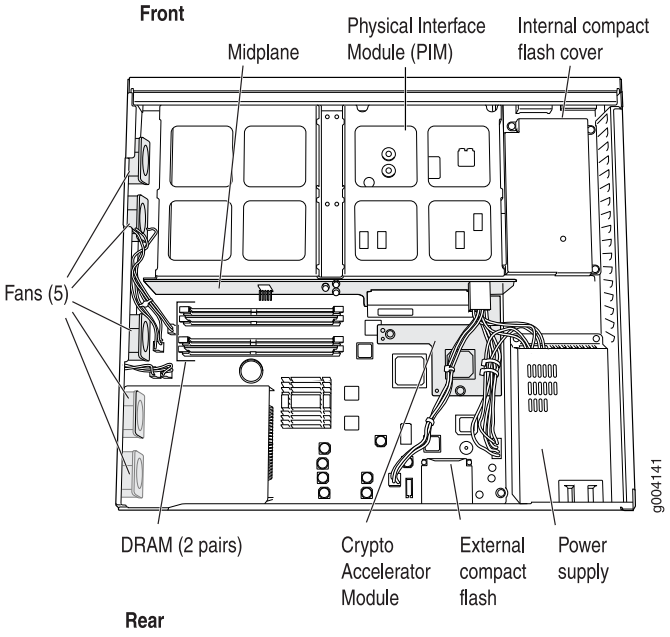

Figure 7: J2350 Hardware Components

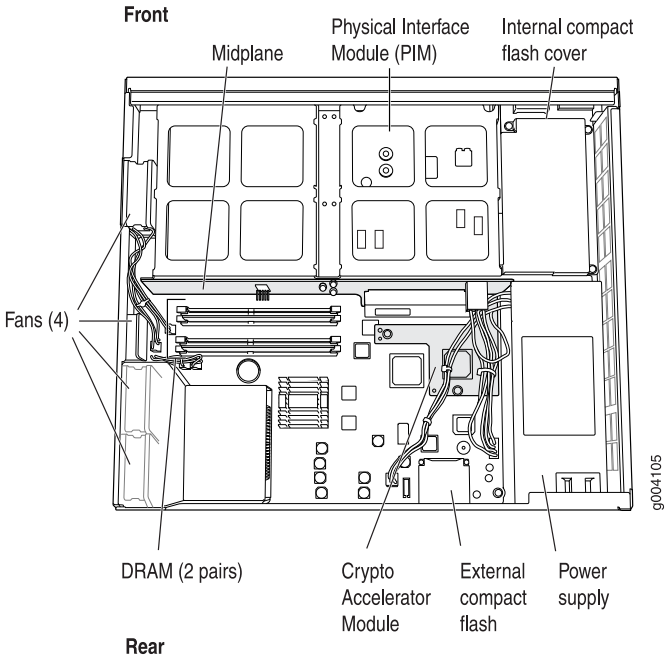

Table 6 on page 17 summarizes the physical specifications for the router chassis.

Table 6: J2320 and J2350 Physical Specifications

Description	Value
Chassis dimensions	■ J2320 Services Router ■ 1.75 in. (4.45 cm) high ■ 17.51 in. (44.48 cm) wide—18.9 in. (48.01 cm) wide with mounting brackets attached ■ 15.1 in. (38.35 cm) deep—plus 0.78 in. (1.98 cm) of hardware that protrudes from the chassis front ■ J2350 Services Router ■ 2.61 in. (6.63 cm) high ■ 17.51 in. (44.48 cm) wide—18.9 in. (48.01 cm) wide with mounting brackets attached ■ 15.1 in. (38.35 cm) deep—plus 0.78 in. (1.98 cm) of hardware that protrudes from the chassis front
Router weight	■ J2320 Services Router ■ Minimum (no PIMs): 14.8 lbs (6.7 kg) ■ Maximum (three PIMs): 15.9 lbs (7.2 kg) ■ J2350 Services Router ■ Minimum (no PIMs): 16.3 lbs (7.4 kg) ■ Maximum (five PIMs): 18.2 lbs (8.3 kg)

J2320 and J2350 Midplane

The J2320 and J2350 midplane is located in the center of the chassis and forms the rear of the PIM card cage (see Figure 6 on page 16 and Figure 7 on page 17). You install the PIMs into the midplane from the front of the chassis. Data packets are transferred across the midplane from the PIM to the Routing Engine, and from the Routing Engine across the midplane to the destination PIM.

A time-division multiplexing (TDM) bus in J2320 and J2350 routers provides support for the Avaya VoIP module TGM550. The TGM550 converts the voice path from the TDM bus to compressed or uncompressed and packetized VoIP on an Ethernet connection. For more information, see "PIM and VoIP Module Overview" on page 43.

J2320 and J2350 Routing Engine Hardware

The Routing Engine consists of the following components. For more information, see "Software Overview" on page 39.

- Processor—Creates the packet forwarding switch fabric for the router and runs JUNOS software to maintain the router's routing tables and routing protocols.
- DRAM—Buffers incoming packets and provides storage for the routing and forwarding tables and for other Routing Engine processes.

  To view the amount of DRAM installed on your router, issue the show chassis routing-engine command.
- EPROM—Stores the serial number of the Routing Engine.

  To view the serial number of the Routing Engine, issue either the show chassis routing-engine command or the show chassis hardware command.
- Crypto Accelerator Module—Processor card that enhances performance of cryptographic algorithms used in IP security (IPSec) services. The cryptographic algorithms supported include Advanced Encryption Standard (AES), Data Encryption Standard (DES), triple DES (3DES), Hashed Message Authentication Code-Message Digest 5 (HMAC-MD5), and HMAC-Secure Hash Algorithm 1 (SHA-1). The Crypto Module is an optional feature of J2320 and J2350 Services Routers.

  To determine whether there is a Crypto Accelerator Module installed on your router, issue the show chassis hardware command.
- Compact flash—Provides primary storage for software images, configuration files, and microcode. J-series routers have a primary or internal compact flash located on the system board. For information about replacing the internal compact flash, see "Replacing Internal Compact Flashes on J2320 and J2350 Routers" on page 182.

  J2320 and J2350 Services Routers also provide a slot in the rear of the chassis into which you can insert an additional external compact flash. For information about external compact flashes, see "J2320 and J2350 External Compact Flashes" on page 24.

J2320 and J2350 Boot Devices

J2320 and J2350 Services Routers can boot from three devices:

- Internal compact flash
- External compact flash (also known as the removable compact flash)
- USB storage device

Normally, a J2320 or J2350 Services Router boots from the internal compact flash. If the internal compact flash fails, the router attempts to boot from the external compact flash if it is installed. If the external compact flash is not present or fails, the router attempts to boot from the USB storage device.

J2320 and J2350 Front Panel

The front panel of a J2320 or J2350 Services Router (see Figure 8 on page 19 and Figure 9 on page 19) allows you to install or remove PIMs, view router status LEDs, access the console port, and perform simple control functions.

Figure 8: Front of J2320 Chassis

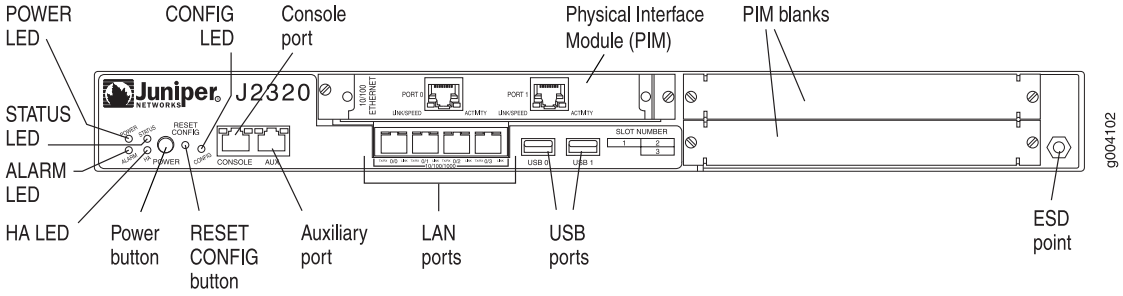

Figure 9: Front of J2350 Chassis

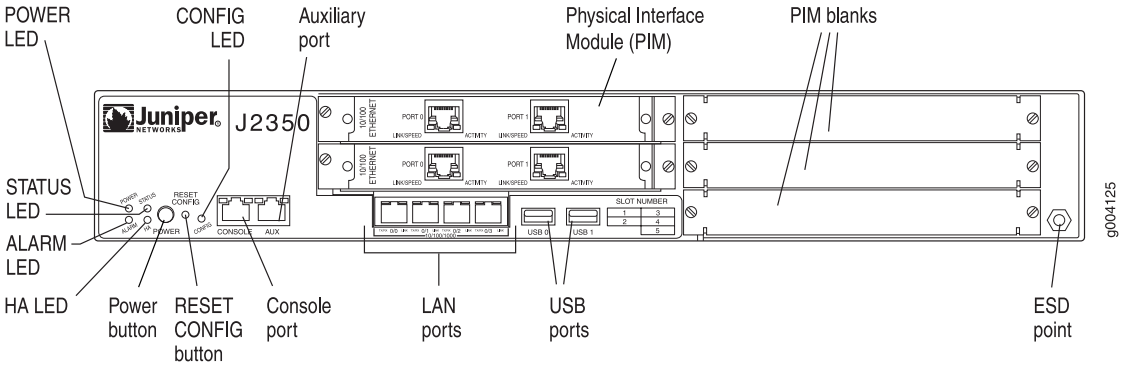

The components of the front panel, are described in the following sections:

- Physical Interface Modules (PIMs) on page 20
- Power Button and POWER LED on page 20

- STATUS LED on page 21
- ALARM LED on page 21
- HA LED on page 22
- RESET CONFIG Button on page 22
- Built-In Gigabit Ethernet Ports on page 23
- Console Port on page 23
- AUX Port on page 23
- USB Port on page 24

Physical Interface Modules (PIMs)

Physical Interface Modules (PIMs) provide the physical connection to various network media types. For information about individual PIMs, see "Field-Replaceable PIMs" on page 46.

For pinouts of PIM cable connectors, see "Network Cable Specifications and Connector Pinouts" on page 227. For PIM replacement instructions, see "Replacing a PIM" on page 176.

The J2320 front panel has three slots and the J2350 front panel has five slots for field-replaceable PIMs. These slots are numbered from top to bottom and from left to right as shown in Figure 10 on page 20.

Slot 0 is a fixed interface module that contains four built-in Gigabit Ethernet ports. For more information, see "Built-In Gigabit Ethernet Ports" on page 23.

Figure 10: Slot Number Diagram on J2320 and J2350

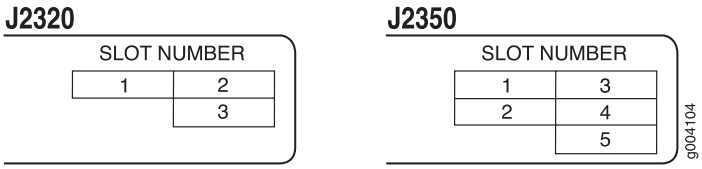

Power Button and POWER LED

The power button is located on the left side of the front panel (see Figure 1 on page 14). You can use the power button to power the Services Router on and off. When you power on the router, the Routing Engine boots as the power supply completes its startup sequence.

The POWER LED is located to the upper left of the LED dashboard. Table 7 on page 21 describes the POWER LED.

Table 7: J2320 and J2350 POWER LED

Color	State	Description
Green	On steadily	Power is functioning correctly.
	Blinking	Power button has been pressed and quickly released, and the router is gracefully shutting down.
Unlit	Off	Router is not receiving power.

After the router is powered on, status indicators—such as LEDs on the front panel and show chassis command output—can take up to 60 seconds to indicate that the power supply is functioning normally. Ignore error indicators that appear during the first 60 seconds.

If you need to power off the router after the Routing Engine finishes booting, use the J-Web interface or the CLI to halt the Services Router first. For instructions, see the *J-series Services Router Administration Guide*. Alternatively, you can press and release the power button to gracefully shut down the router. For more information, see "Powering a Services Router On and Off" on page 131.

STATUS LED

When the system is powered on, the STATUS LED changes from off to blinking green. Startup takes approximately 90 seconds to complete. If you want to turn the system off and on again, we recommend waiting a few seconds between shutting it down and powering it back up. Table 8 on page 21 describes the STATUS LED.

Table 8: J2320 and J2350 STATUS LED

Color	State	Description
Green	Blinking	Router is starting up or performing diagnostics.
	On steadily	Router is operating normally.
Red	Blinking	Error has been detected.

ALARM LED

The ALARM LED lights amber to indicate a minor condition that requires monitoring or maintenance and lights red to indicate a major condition that can result in a system shutdown. When the condition is corrected, the light turns off. Table 9 on page 22 describes the ALARM LED.

Table 9: J2320 and J2350 ALARM LED

Color	State	Description
Red	On steadily	Major alarm indicates a critical situation on the router that has resulted from one of the following conditions. A red alarm condition requires immediate action: ■ One or more hardware components have failed. ■ One or more hardware components have exceeded temperature thresholds. ■ An alarm condition configured on an interface has triggered a critical warning.
Yellow	On steadily	Minor alarm condition requires monitoring or maintenance: ■ Indicates a noncritical condition on the router that, if left unchecked, might cause an interruption in service or degradation in performance. ■ A missing rescue configuration or software license generates an amber system alarm.
Unlit	Off	No alarms.

For information about alarm conditions and corrective actions, see "Chassis Alarm Conditions" on page 213. For additional information, see the *J-series Services Router Administration Guide*.

HA LED

The HA (high availability) LED is for future use. The LED lights when the router starts, but otherwise remains unlit.

RESET CONFIG Button

Use the RESET CONFIG button to return the router to either the rescue configuration or the factory default configuration. The button is recessed to prevent it from being pressed accidentally. To press this button insert a small probe (such as a straightened paper clip) into the pinhole on the front panel (see Figure 8 on page 19 and Figure 9 on page 19).

For example, if someone inadvertently commits a configuration that denies management access to a Services Router, you can delete the invalid configuration and replace it with a rescue configuration by pressing the RESET CONFIG button. You must have previously set the rescue configuration through the J-Web interface or the CLI. The rescue configuration is a previously committed, valid configuration.



CAUTION: Pressing and holding the RESET CONFIG button for 15 seconds or more—until the STATUS LED blinks red—deletes *all* configurations on the router, including the backup configurations and rescue configuration, and loads and commits the factory configuration.

You can change the default behavior of the RESET CONFIG button. For more information, see the *J-series Services Router Basic LAN and WAN Access Configuration Guide*.

Built-In Gigabit Ethernet Ports

Four built-in Gigabit Ethernet ports provide LAN connections over copper interfaces to hubs, switches, local servers, and workstations. You can also designate an Ethernet port for management traffic. When configuring one of these ports, you use the interface name that corresponds to the port's location. From left to right on the front panel, the interface names for the ports are ge-0/0/0, ge-0/0/1, ge-0/0/2, and ge-0/0/3.

For Gigabit Ethernet port pinout information, see "Gigabit Ethernet uPIM RJ-45 Connector Pinout" on page 237.

Each port has two LEDs, a TX/RX LED on the left side and a LINK LED on the right side. Table 10 on page 23 describes the built-in Ethernet port LEDs.

Table 10: Gigabit Ethernet Port LEDs

Function	Color	State	Description
LINK	Green	On steadily	Port is online.
	Unlit	Off	Port is offline.
TX/RX	Green	Blinking	Port is transmitting or receiving data.
	Unlit	Off	Port might be online, but it is not receiving data.

Console Port

You can use the console port on the chassis front panel to connect to the Routing Engine through an RJ-45 serial cable. From the chassis console port, you can use the CLI to configure the router. The console port is configured as data terminal equipment (DTE) and supports the RS-232 (EIA-232) standard.

For information about securing the chassis console port, see the *J-series Services Router Administration Guide*.

For pinout information, see "Chassis Console Port Pinouts" on page 238.

AUX Port

The port labeled AUX on the front panel of the J-series Services Router is for future use and is not activated.

USB Port

The USB ports on the front panel of the router (see Figure 8 on page 19 and Figure 9 on page 19) accept a USB storage device or USB storage device adapter with a compact flash installed, as defined in the *CompactFlash Specification* published by the CompactFlash Association. When a USB storage device is installed and configured, it automatically acts as a secondary boot device if the internal compact flash fails on startup. Depending on the size of the USB storage device, you can also configure it to receive any core files generated during a failure. For information about configuring a USB storage device, see the *J-series Services Router Administration Guide*.



NOTE: For a list of supported USB storage devices, see the *J-series Services Router Release Notes* at http://www.juniper.net.

J2320 and J2350 External Compact Flashes

On J2320 and J2350 routers, an external compact flash, also known as removable compact flash, accepts a type I or II compact flash, as defined in the *CompactFlash Specification* published by the CompactFlash Association. The J2320 and J2350 chassis has a slot on the rear for external compact flashes (see Figure 3 on page 15). When the external compact flash is installed and configured, it automatically acts as the secondary boot device if the internal compact flash fails on startup.

Depending on the capacity of the external compact flash, you can also configure it to receive any core files generated during a failure. For information about configuring an external compact flash, see the *J-series Services Router Administration Guide*.

J2320 Power System

The J2320 Services Router uses AC power (see Figure 3 on page 15). The autosensing power supply distributes the different output voltages to the router components according to their voltage requirements. The power supply is fixed in the chassis, and is not field-replaceable.

The AC power supply has a single AC appliance inlet that requires a dedicated AC power feed.

The J2320 AC-powered chassis has a power switch and does not include a power LED.

For information about site power preparations, see “Power Guidelines, Requirements, and Specifications” on page 109. For information about connecting the router to power and ground, see “Connecting Power” on page 126.

J2350 Power System

The J2350 Services Router uses either AC or DC power. The autosensing power supply (see Figure 4 on page 15 or Figure 5 on page 16) distributes the different output voltages to the router components according to their voltage requirements. The power supply is fixed in the chassis, and is not field-replaceable.

The AC power supply has a single AC appliance inlet that requires a dedicated AC power feed. The DC power supply has a terminal block that provides a single DC input (–48 VDC and return) and requires a dedicated 15 A (–48 VDC) circuit breaker.

The J2350 AC-powered or DC-powered chassis has a power switch and does not include a power LED.

For information about site power preparations, see "Power Guidelines, Requirements, and Specifications" on page 109. For information about connecting the router to power and ground, see "Connecting Power" on page 126.



NOTE: You cannot mix DC and AC power supplies in the same chassis.



WARNING: DC-powered Services Routers are intended for installation only in a restricted access location.

J2320 and J2350 Cooling System

The cooling system in J2320 and J2350 routers is from side to side. The J2320 router has five cooling fans and the J2350 router has four cooling fans. The fans draw air through vents along the left side of the chassis and exhaust it through vents on the right side of the chassis. The airflow produced by these fans keeps router components within the acceptable temperature range (see Figure 11 on page 26 and Figure 12 on page 26). The speed of the fans is adjusted automatically according to the current temperature.

On J2350 routers that comply with Network Equipment Building System (NEBS) criteria, an air filter protects the air intake opening at the front of the chassis and must be replaced periodically. To verify that the system is a NEBS-compliant system, run the show chassis hardware command. A NEBS-compliant system displays the term *NEBS* in the output. For instructions on how to replace air filters, see "Replacing Air Filters on J2350 Routers" on page 209.

The Routing Engine monitors the temperature of the router components. If the maximum temperature specification, as measured at the CPU junction, is exceeded and the router cannot be adequately cooled, the Routing Engine shuts down the hardware components.

J2320 and J2350 routers shut down when the CPU temperature reaches 80°C (176°F). There is no alarm for temperature. You can view the CPU junction temperature using the show chassis routing-engine command. The CPU temperature runs a few degrees higher than the routing engine temperature displayed on the Monitor > Chassis page of the J-Web interface.

An additional fan is part of each power supply. This fan is not regulated by the operating system.

Figure 11: Airflow Through the J2320 Chassis

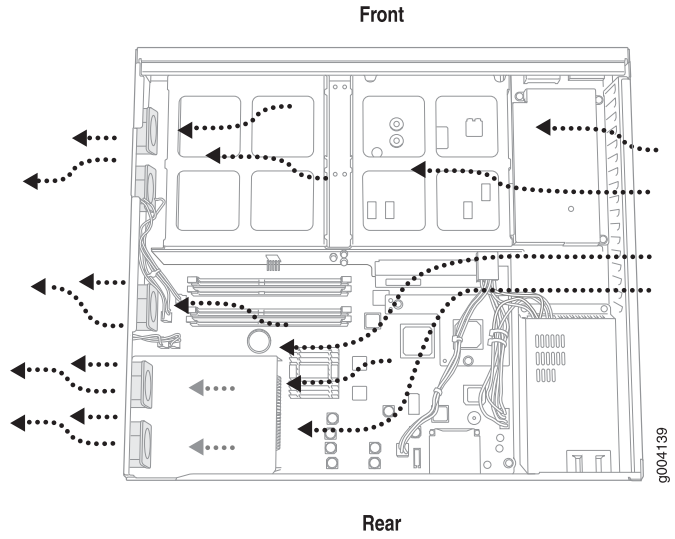

Figure 12: Airflow Through the J2350 Chassis

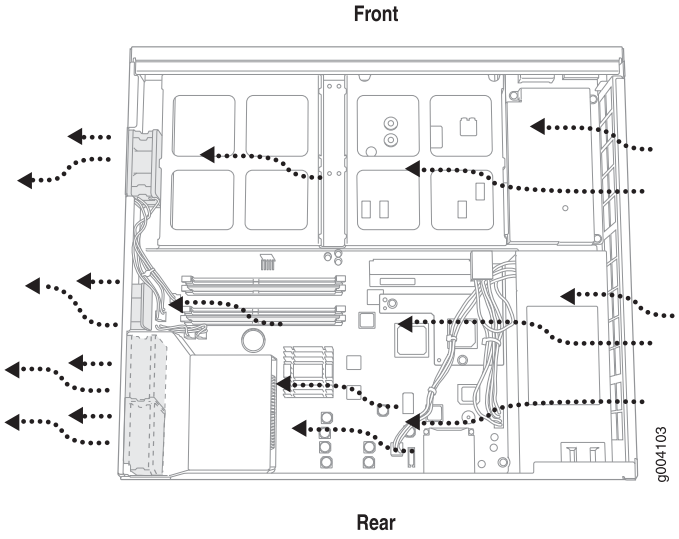

J4350 and J6350 Services Router Hardware Features

This section contains the following topics:

- J4350 and J6350 Chassis on page 27
- J4350 and J6350 Midplane on page 31
- J4350 and J6350 Routing Engine Hardware on page 31
- J4350 and J6350 Boot Devices on page 31
- J4350 and J6350 Front Panel on page 32

- J4350 Power System on page 36
- J6350 Power System on page 37
- J4350 and J6350 Cooling System on page 38

J4350 and J6350 Chassis

The J4350 and J6350 chassis is a rigid sheet metal structure that houses all the other router components (see Figure 13 on page 28 through Figure 18 on page 30). The chassis can be installed in many types of racks or cabinets. For information about acceptable rack types, see "Rack Requirements" on page 106.

In addition to the features described in subsequent sections, the chassis includes the following features:

- Mounting brackets—One pair of metal brackets can be mounted at the front or center of the chassis. Use the brackets for mounting the chassis in a rack or cabinet.
- Earthing terminals—Two protective earthing terminals, PEM nuts at the rear of the chassis ensure safe dissipation of static electricity in all situations.
- ESD point—One electrostatic discharge (ESD) point, a banana plug receptacle at the front of the chassis, minimizes the risk of electrical discharge in potentially hazardous environments.



CAUTION: Before removing or installing components of a functioning router, attach an ESD strap to an ESD point and place the other end of the strap around your bare wrist. Failure to use an ESD strap could result in damage to the router.

The router must be connected to earth ground during normal operation. The protective earthing terminals on the rear of the chassis are provided to connect the router to ground (see Figure 14 on page 28). Additional grounding is provided to an AC-powered router when you plug its power supply into a grounded AC power receptacle.

For additional safety information, see "Safety and Regulatory Compliance Information" on page 251.

Figure 13: Front of J4350 and J6350 Chassis

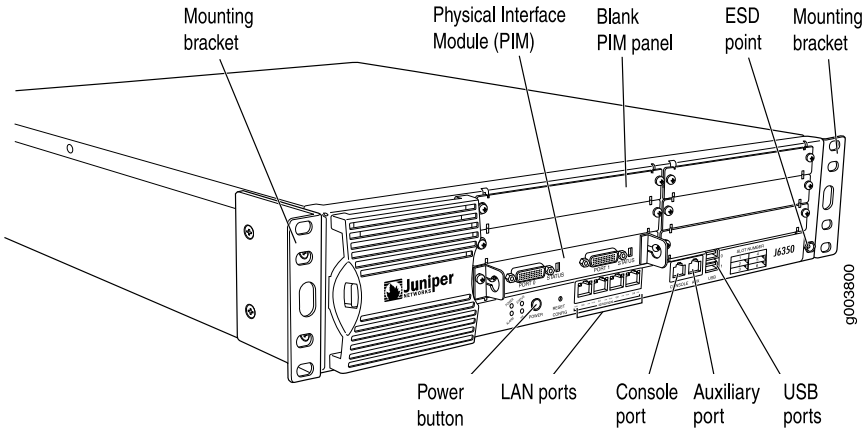

Figure 14: Rear of J4350 AC-Powered Chassis

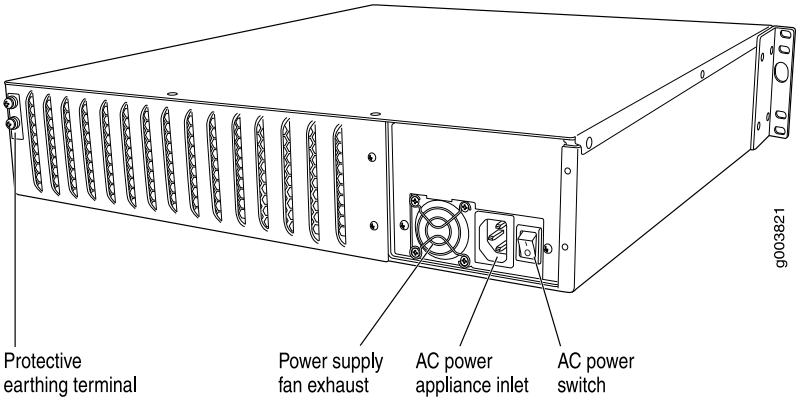

NOTE: The J4350 AC-powered chassis has a power switch and does not include a power supply LED (unlike the J6350 AC-powered chassis).

Figure 15: Rear of J6350 AC-Powered Chassis

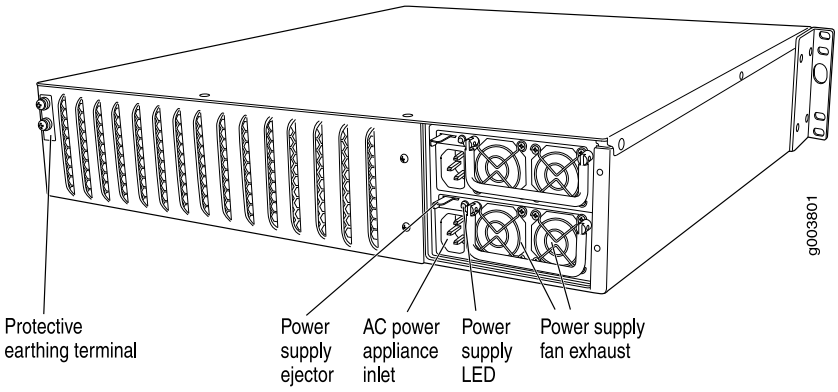

Figure 16: Rear of J4350 DC-Powered Chassis

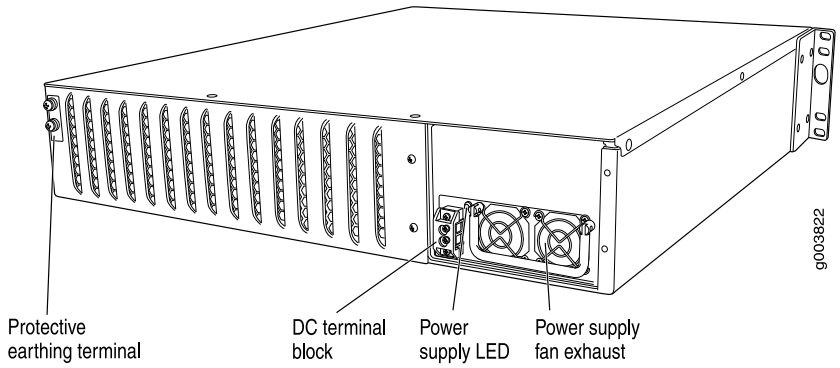

Figure 17: Rear of DC-Powered J6350 Chassis

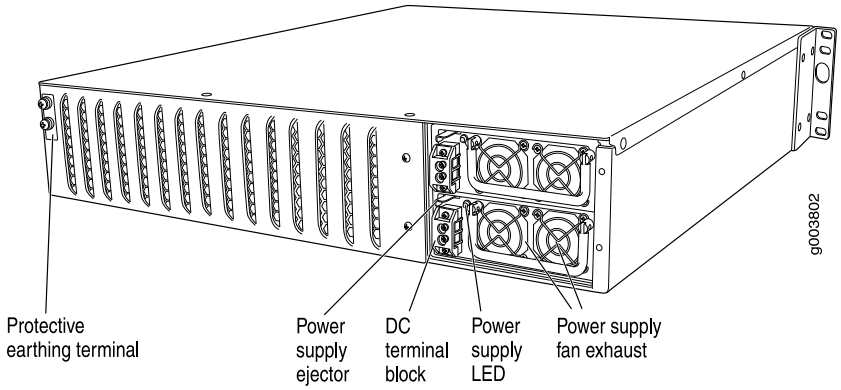

Figure 18: J4350 and J6350 Hardware Components

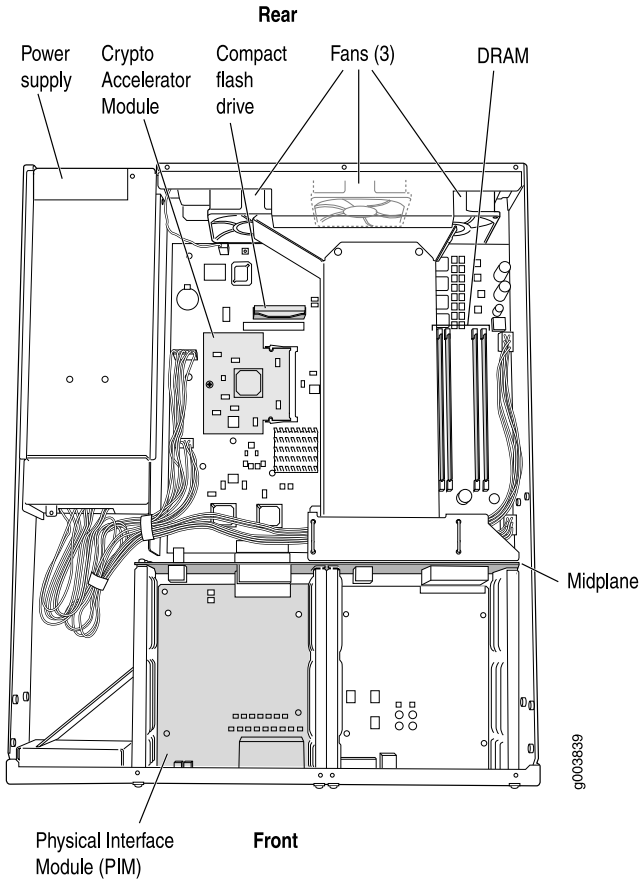

Table 11 on page 30 summarizes the physical specifications for the router chassis.

Table 11: J4350 and J6350 Physical Specifications

Description	Value
Chassis dimensions	■ 3.44 in. (8.74 cm) high ■ 17.44 in. (44.3 cm) wide—19.44 in. (48.38 cm) wide with mounting brackets attached ■ 21.13 in. (53.67 cm) deep—plus 0.5 in. (1.27 cm) of hardware that protrudes from the chassis front
Router weight	■ J4350 Services Router: ■ Minimum (no PIMs): 23 lb (10.4 kg) ■ Maximum (six PIMs): 25.3 lb (11.5 kg) ■ J6350 Services Router ■ Minimum (no PIMs and one power supply): 25.5 lb (11.6 kg) ■ Maximum (six PIMs and two power supplies): 30.7 lb (13.9 kg)

J4350 and J6350 Midplane

The midplane is located in the center of the chassis and forms the rear of the PIM card cage (see Figure 18 on page 30). You install the PIMs into the midplane from the front of the chassis. Data packets are transferred across the midplane from the PIM to the Routing Engine, and from the Routing Engine across the midplane to the destination PIM.

J4350 and J6350 Routing Engine Hardware

The Routing Engine consists of the following components. For more information, see "Software Overview" on page 39.

- Processor—Creates the packet forwarding switch fabric for the router and runs JUNOS software to maintain the router's routing tables and routing protocols.
- DRAM—Buffers incoming packets and provides storage for the routing and forwarding tables and for other Routing Engine processes.

  To view the amount of DRAM installed on your router, issue the show chassis routing-engine command.
- EPROM—Stores the serial number of the Routing Engine.

  To view the serial number of the Routing Engine, issue either the show chassis routing-engine command or the show chassis hardware command.
- Crypto Accelerator Module—Processor card that enhances performance of cryptographic algorithms used in IP security (IPSec) services. The cryptographic algorithms supported include Advanced Encryption Standard (AES), Data Encryption Standard (DES), triple DES (3DES), Hashed Message Authentication Code-Message Digest 5 (HMAC-MD5), and HMAC-Secure Hash Algorithm 1 (SHA-1).

  To determine whether there is a Crypto Accelerator Module installed on your router, issue the show chassis hardware command.
- Compact flash—Provides primary storage for software images, configuration files, and microcode. J4350 and J6350 routers have a slot on the motherboard for an internal compact flash. For information about replacing the compact flash, see "Replacing Internal Compact Flashes on J4350 and J6350 Routers" on page 185.

J4350 and J6350 Boot Devices

The J4350 and J6350 Services Routers can boot from two devices:

- Internal compact flash
- USB storage device

Normally, the J4350 or J6350 Services Router boots from the internal compact flash. If the compact flash fails, the router attempts to boot from the USB storage device.

J4350 and J6350 Front Panel

The front panel of the Services Router (see Figure 19 on page 32) allows you to install or remove PIMs, view router status LEDs, access the console port, and perform simple control functions.

Figure 19: Front of J4350 and J6350 Chassis

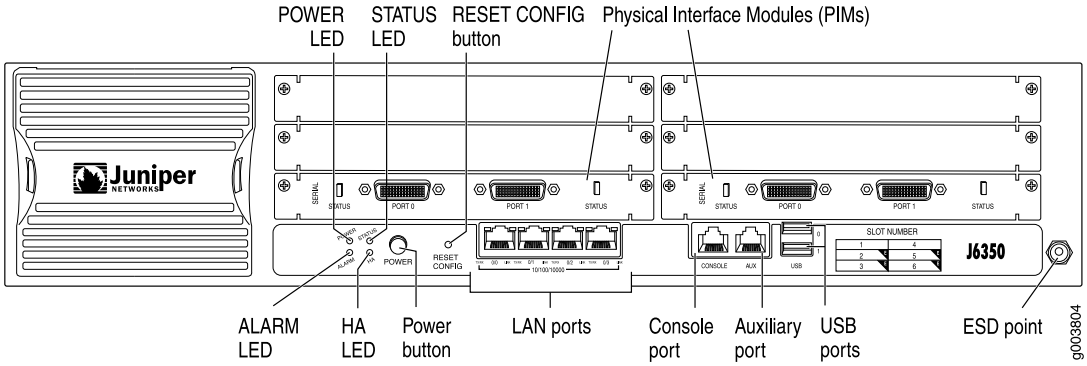

The components of the front panel, from left to right, are described in the following sections:

- Physical Interface Modules (PIMs) on page 32
- Power Button and POWER LED on page 33
- STATUS LED on page 34
- ALARM LED on page 34
- HA LED on page 35
- RESET CONFIG Button on page 35
- Built-In Gigabit Ethernet Ports on page 35
- Console Port on page 36
- AUX Port on page 36
- USB Port on page 36

Physical Interface Modules (PIMs)

Physical Interface Modules (PIMs) provide the physical connection to various network media types. For information about individual PIMs, see “Field-Replaceable PIMs” on page 46.

For pinouts of PIM cable connectors, see “Network Cable Specifications and Connector Pinouts” on page 227. For PIM replacement instructions, see “Replacing a PIM” on page 176.

Each J4350 and J6350 Services Router has six front panel slots for field-replaceable PIMs. These slots are numbered from top to bottom and from left to right as shown in the slot number diagram on the front panel, shown in Figure 20 on page 33.

Figure 20: Slot Number Diagram on Front Panel



Gigabit Ethernet and 4-port Fast Ethernet ePIMs can be installed in high-speed slots only. High-speed slots are indicated by a black triangle containing an **E** in the front panel slot number diagram. On J4350 Services Routers, the high-speed slots are slot 3 and slot 6. On J6350 Services Routers, the high-speed slots are slots 2, 3, 5, and 6.

Slot 0 is the fixed interface module that contains the built-in Ethernet ports.

Power Button and POWER LED

The power button is located on the left side of the front panel (see Figure 19 on page 32). You can use the power button to power the Services Router on and off. When you power on the router, the Routing Engine boots as the power supply completes its startup sequence.

The POWER LED is located to the upper left of the LED dashboard. Table 12 on page 33 describes the POWER LED.

Table 12: POWER LED

Color	State	Description
Green	On steadily	Power is functioning correctly.
	Blinking	Power button has been pressed and quickly released, and the router is gracefully shutting down.
Unlit	Off	Router is not receiving power.

After the router is powered on, status indicators—such as LEDs on the front panel and show chassis command output—can take up to 60 seconds to indicate that the power supply is functioning normally. Ignore error indicators that appear during the first 60 seconds.

If you need to power off the router after the Routing Engine finishes booting, use the J-Web interface or the CLI to halt the Services Router first. For instructions, see the *J-series Services Router Administration Guide*. Alternatively, you can press and release the power button to gracefully shut down the router. For more information, see "Powering a Services Router On and Off" on page 131.

STATUS LED

When the system is powered on, the STATUS LED changes from off to blinking green. Startup takes approximately 90 seconds to complete. If you want to turn the system off and on again, we recommend waiting a few seconds between shutting it down and powering it back up. Table 13 on page 34 describes the STATUS LED.

Table 13: STATUS LED

Color	State	Description
Green	Blinking	Router is starting up or performing diagnostics.
	On steadily	Router is operating normally.
Red	Blinking	Error has been detected.

ALARM LED

The ALARM LED lights yellow to indicate a minor condition that requires monitoring or maintenance and lights red to indicate a major condition that can result in a system shutdown. When the condition is corrected, the light turns off. Table 14 on page 34 describes the ALARM LED.

Table 14: ALARM LED

Color	State	Description
Red	On steadily	Major alarm indicates a critical situation on the router that has resulted from one of the following conditions. A red alarm condition requires immediate action: ■ One or more hardware components have failed. ■ One or more hardware components have exceeded temperature thresholds. ■ An alarm condition configured on an interface has triggered a critical warning.
Yellow	On steadily	Minor alarm condition requires monitoring or maintenance: ■ Indicates a noncritical condition on the router that, if left unchecked, might cause an interruption in service or degradation in performance. ■ A missing rescue configuration or software license generates a yellow system alarm.
Unlit	Off	No alarms.

For information about alarm conditions and corrective actions, see “Chassis Alarm Conditions” on page 213. For additional information, see the *J-series Services Router Administration Guide*.

HA LED

The HA (high availability) LED is for future use. The LED lights when the router starts, but otherwise remains unlit.

RESET CONFIG Button

Use the RESET CONFIG button to return the router to either the rescue configuration or the factory default configuration. The button is recessed to prevent it from being pressed accidentally. To press this button insert a small probe (such as a straightened paper clip) into the pinhole on the front panel (see Figure 19 on page 32).

For example, if someone inadvertently commits a configuration that denies management access to a Services Router, you can delete the invalid configuration and replace it with a rescue configuration by pressing the RESET CONFIG button. You must have previously set the rescue configuration through the J-Web interface or the CLI. The rescue configuration is a previously committed, valid configuration.



CAUTION: Pressing and holding the RESET CONFIG button for 15 seconds or more—until the STATUS LED blinks red—deletes *all* configurations on the router, including the backup configurations and rescue configuration, and loads and commits the factory configuration.

You can change the default behavior of the RESET CONFIG button. For more information, see the *J-series Services Router Basic LAN and WAN Access Configuration Guide*.

Built-In Gigabit Ethernet Ports

Four built-in Gigabit Ethernet ports provide LAN connections over copper interfaces to hubs, switches, local servers, and workstations. You can also designate an Ethernet port for management traffic. When configuring one of these ports, you use the interface name that corresponds to the port's location. From left to right on the front panel, the interface names for the ports are ge-0/0/0, ge-0/0/1, ge-0/0/2, and ge-0/0/3.

For Gigabit Ethernet port pinout information, see "Gigabit Ethernet ePIM RJ-45 Connector Pinout" on page 238.

Each port has two LEDs, a TX/RX LED on the left side and a LINK LED on the right side. Table 15 on page 35 describes the built-in Ethernet port LEDs.

Table 15: Gigabit Ethernet Port LEDs

Function	Color	State	Description
LINK	Green	On steadily	Port is online.
	Unlit	Off	Port is offline.

Table 15: Gigabit Ethernet Port LEDs *(continued)*

Function	Color	State	Description
TX/RX	Green	Blinking	Port is transmitting or receiving data.
	Unlit	Off	Port might be online, but it is not receiving data.

Console Port

You can use the console port on the chassis front panel to connect to the Routing Engine through an RJ-45 serial cable. From the chassis console port, you can use the CLI to configure the router. The console port is configured as data terminal equipment (DTE) and supports the RS-232 (EIA-232) standard.

For information about securing the chassis console port, see the *J-series Services Router Administration Guide*.

For pinout information, see "Chassis Console Port Pinouts" on page 238.

AUX Port

The port labeled AUX on the front panel of the J4350 or J6350 Services Router is for future use and is not activated.

USB Port

The USB ports on the front panel of the router (see Figure 19 on page 32) accept a USB storage device or USB storage device adapter with a compact flash installed, as defined in the *CompactFlash Specification* published by the CompactFlash Association. When a USB storage device is installed and configured, it automatically acts as a secondary boot device if the internal compact flash fails on startup. Depending on the size of the USB storage device, you can also configure it to receive any core files generated during a failure. For information about configuring a USB storage device, see the *J-series Services Router Administration Guide*.



NOTE: For a list of supported USB storage devices, see the *J-series Services Router Release Notes* at http://www.juniper.net.

J4350 Power System

The J4350 Services Router uses either AC or DC power. The autosensing power supply (see Figure 14 on page 28 or Figure 16 on page 29) distributes the different output voltages to the router components according to their voltage requirements. The power supply is fixed in the chassis and is not field-replaceable.

The AC power supply has a single AC appliance inlet that requires a dedicated AC power feed. The DC power supply has a terminal block that provides a single DC input (–48 VDC and return) and requires a dedicated 15 A (–48 VDC) circuit breaker.

The J4350 AC-powered chassis has a power switch and does not include a power LED.

The J4350 DC-powered chassis includes a power supply LED located to the upper right of the power supply connector. Table 16 on page 37 describes the power supply LED.

Table 16: Power Supply LED

State	Description
Off	No power is flowing to the power supply.
Green	Power supply is connected and power is flowing.
Yellow	Power supply is connected, but the router is not powered on.

For information about site power preparations, see "Power Guidelines, Requirements, and Specifications" on page 109. For information about connecting the router to power and ground, see "Connecting Power" on page 126.



NOTE: You cannot mix DC and AC power supplies in the same chassis.



WARNING: DC-powered Services Routers are intended for installation only in a restricted access location.

J6350 Power System

The J6350 Services Router uses either AC or DC power. You can install one or two autosensing, load-sharing power supplies on the system board at the bottom of the chassis, as shown in Figure 15 on page 28 or Figure 17 on page 29. The power supplies distribute the different output voltages to the router components, depending on their voltage requirements. When two power supplies are installed and operational, they automatically share the electrical load.

For full redundancy, two power supplies are required. If a power supply stops functioning for any reason, the second power supply instantly begins providing all the power the router needs for normal functioning. It can provide full power indefinitely.

Each power supply has an LED located to the upper right of the power supply connector. Table 16 on page 37 describes the power supply LED.

For information about site power preparations, see "Power Guidelines, Requirements, and Specifications" on page 109. For information about connecting the router to power and ground, see "Connecting Power" on page 126.

Power supplies on J6350 Services Routers are hot-removable and hot-insertable. You can remove and replace a redundant power supply without powering down the router or disrupting the routing functions. To avoid electrical injury, carefully follow the instructions in "Replacing Power System Components" on page 195.

NOTE: You cannot mix DC and AC power supplies in the same chassis.

WARNING: DC-powered Services Routers are intended for installation only in a restricted access location.

J4350 and J6350 Cooling System

The cooling system includes three fans at the rear of the chassis. The airflow produced by these fans keeps router components within the acceptable temperature range (see Figure 21 on page 39). The speed of the fans is adjusted automatically according to the current temperature.

An air filter protects the air intake opening at the front of the chassis and must be replaced periodically. For instructions, see "Replacing Air Filters on J4350 and J6350 Routers" on page 210.

The Routing Engine monitors the temperature of the router components. If the maximum temperature specification, as measured at the CPU junction, is exceeded and the router cannot be adequately cooled, the Routing Engine shuts down the hardware components.

When the CPU temperature reaches 80°C (176°F), a yellow alarm is triggered. When the CPU temperature reaches 105°C (221°F), the system shuts down. There is no red alarm for temperature. You can view the CPU junction temperature using the show chassis routing-engine command. The CPU temperature runs a few degrees higher than the routing engine temperature displayed on the Monitor > Chassis page of the J-Web interface.

NOTE: On J4350 and J6350 routers that are not designed to comply with Network Equipment Building System (NEBS) criteria, the temperature at which the system shuts down is 90°C (194°F) rather than 105°C (221°F). To verify that the system is a NEBS-compliant system, run the show chassis hardware command. A NEBS-compliant system displays the term *NEBS* in the output.

An additional fan is part of each power supply. This fan is not regulated by the operating system.

Figure 21: Airflow Through the J4350 and J6350 Chassis

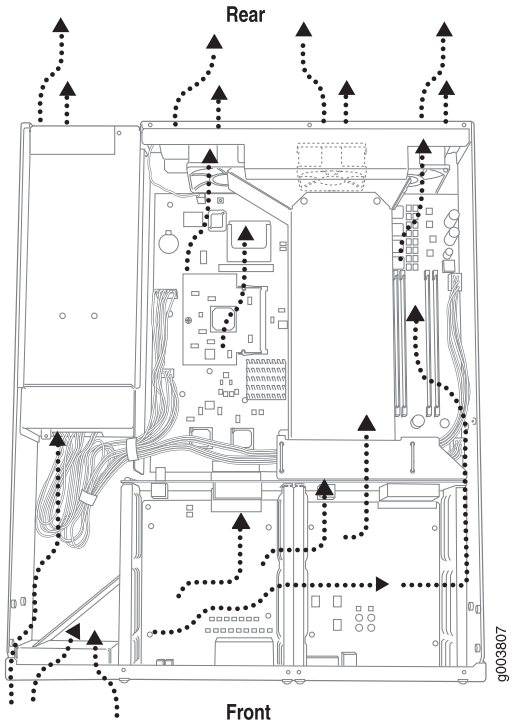

Software Overview

Each J-series Services Router runs the JUNOS software on its general-purpose processors. Designed for the large production networks typically supported by Internet service providers (ISPs), the JUNOS software includes processes for Internet Protocol (IP) routing and for managing interfaces, networks, and the router chassis.

The JUNOS software runs on the Routing Engine. The Routing Engine kernel coordinates communication among the JUNOS software processes and provides a link to the Packet Forwarding Engine.

With the J-Web interface and the command-line interface (CLI) you configure the routing protocols that run on the Services Router and set the properties of its network interfaces. After activating a software configuration, use either user interface to monitor the protocol traffic passing through the router, manage operations, and diagnose protocol and network connectivity problems.

This section contains the following topics:

- Routing Engine and Packet Forwarding Engine on page 40
- Kernel and Microkernel on page 40
- JUNOS Software Processes on page 40
- User Interfaces on page 41

Routing Engine and Packet Forwarding Engine

A Services Router has two primary software processing components:

- Routing Engine—The Routing Engine provides three main functions:
  - Creates the packet forwarding switch fabric for the Services Router, providing route lookup, filtering, and switching on incoming data packets, then directing outbound packets to the appropriate interface for transmission to the network.
  - Maintains the routing tables used by the router and controls the routing protocols that run on the router.
  - Provides control and monitoring functions for the router, including controlling power and monitoring system status.
- Packet Forwarding Engine—Processes packets; applies filters, routing policies, and other features; and forwards packets to the next hop along the route to their final destination.

For information about Routing Engine hardware, see "J2320 and J2350 Routing Engine Hardware" on page 18 and "J4350 and J6350 Routing Engine Hardware" on page 31.

Kernel and Microkernel

The Routing Engine kernel provides the underlying infrastructure for all JUNOS software processes by doing the following:

- Linking the routing tables maintained by the routing protocol process with the forwarding table maintained by the Routing Engine
- Coordinating communication with the Packet Forwarding Engine, primarily by synchronizing the Packet Forwarding Engine's forwarding table with the master forwarding table maintained by the Routing Engine

The microkernel contains device drivers and processes that the Packet Forwarding Engine uses to govern the flow of packets through the Services Router.

JUNOS Software Processes

The JUNOS software running on the Routing Engine and Packet Forwarding Engine consists of multiple processes that are responsible for individual Services Router functions.

The separation of functions provides operational stability, because each process accesses its own protected memory space. In addition, because each process is a separate software package, you can selectively upgrade all or part of the JUNOS software, for added flexibility.

Table 17 on page 41 describes the primary JUNOS software processes.

Table 17: JUNOS Software Processes

Process	Name	Description
Management process	mgd	Manages the Services Router system as follows: ■ Provides communication between the other processes and an interface to the configuration database ■ Populates the configuration database with configuration information and retrieves the information when queried by other processes to ensure that the system operates as configured ■ Interacts with the other processes when commands are issued through one of the user interfaces on the router
Chassis process	chassisd	Controls a Services Router chassis and its components as follows: ■ Detects hardware on the system that is used to configure network interfaces ■ Monitors the physical status of hardware components and field-replaceable units (FRUs), detecting when environment sensors such as temperature sensors are triggered ■ Relays signals and interrupts—for example, when devices are taken offline, so that the system can close sessions and shut down gracefully
Routing protocol process	rpd	Defines how routing protocols such as RIP, OSPF, and BGP operate on the router, including selecting routes and maintaining fowarding tables.
Interface process (also called device control process)	dcd	Supplies the programs that configure and monitor network interfaces by defining physical characteristics such as link encapsulation, hold times, and keepalive timers.
Forwarding process	fwdd	Responsible for most of the packet transmission through a Services Router. The overall performance of the router is largely determined by the effectiveness of the forwarding process.

User Interfaces

The user interfaces on a Services Router interact with the management process to execute commands and store and retrieve information from the configuration database. The user interfaces operate as clients that communicate with the JUNOS software through an application programming interface (API).

The following primary user interfaces are shipped with the router:

- J-Web graphical user interface—Includes quick configuration capabilities for performing the minimum required steps to enable a feature, plus a built-in configuration editor with access to the entire configuration hierarchy to fully configure the router. The J-Web interface also provides tools for monitoring, managing, and diagnosing router operation.
- Command-line interface (CLI)—Grants access to the complete JUNOS command and configuration hierarchies, to monitor the router, diagnose problems, and configure it completely.

For more information, see “Services Router User Interface Overview” on page 83.

Other user interfaces for the Services Router interact with the management process through the common API interface. These interfaces are designed to facilitate the configuration of one or, in some cases, many routers on the network. Among the supported interfaces are the JUNOScope and Session and Resource Control (SRC) applications. For more information about these products, see the *JUNOScope Software User Guide* and the *SRC-PE Getting Started Guide*.

Chapter 3

PIM and VoIP Module Overview

J-series Services Routers accept Physical Interface Modules (PIMs) and Avaya VoIP modules in the slots on the front of the chassis.



CAUTION: PIMs and VoIP modules are not hot-swappable. You must power off the Services Router before removing or inserting a PIM or VoIP module. Ensure that the PIMs and VoIP modules are installed in the router chassis before booting up the system.

A Physical Interface Module (PIM) is a network interface card that is installed on a J-series Services Router, to provide physical connections to a LAN or a WAN. The PIM receives incoming packets from the network and transmits outgoing packets to the network. Each PIM is equipped with a dedicated network processor that forwards incoming data packets to the Routing Engine, and receives outgoing data packets from the Routing Engine. During this process, the PIM performs framing and line-speed signaling for its medium type.

For a complete list of supported PIMs, see “Field-Replaceable PIMs” on page 46.

Avaya VoIP modules are installed in the router chassis like PIMs, but are controlled by the Avaya Communication Manager (CM) software rather than the JUNOS software. For a complete list of supported modules, see “Avaya VoIP Modules” on page 67.

For J-series Services Router PIM compatibility matrix and datasheets, go to http://www.juniper.net/products/jseries/.

For information about network interfaces, and for configuration instructions, see the *J-series Services Router Basic LAN and WAN Access Configuration Guide*.

This chapter contains the following topics:

- PIM and VoIP Module Terms on page 44
- Field-Replaceable PIMs on page 46
- Avaya VoIP Modules on page 67

PIM and VoIP Module Terms

To understand PIMs and VoIP modules, become familiar with the terms defined in Table 18 on page 44.

Table 18: PIM and VoIP Module Terms

Term	Definition
ADSL 2/2 + Annex A	ITU-T Standard G.992.1 that defines how ADSL works over plain old telephone service (POTS) lines.
ADSL 2/2 + Annex B	ITU-T Standard G.992.1 that defines how ADSL works over Integrated Services Digital Network (ISDN) lines.
bandwidth on demand	ISDN cost-control feature defining the bandwidth threshold that must be reached on all links before a Services Router initiates additional ISDN data connections to provide more bandwidth.
Basic Rate Interface (BRI)	ISDN interface intended for home and small enterprise applications. BRI consists of two 64-Kbps B-channels and one 16-Kbps D-channel.
callback	Alternative feature to dial-in that enables a J-series Services Router to call back the caller from the remote end of a backup ISDN connection. Instead of accepting a call from the remote end of the connection, the router rejects the call, waits a configured period of time, and calls a number configured on the router's dialer interface. See also *dial-in*.
caller ID	Telephone number of the caller on the remote end of a backup ISDN connection, used to dial in and also to identify the caller. Multiple caller IDs can be configured on an ISDN dialer interface. During dial-in, the router matches the incoming call's caller ID against the caller IDs configured on its dialer interfaces. Each dialer interface accepts calls from only callers whose caller IDs are configured on it.
channel service unit (CSU)	Unit that connects a digital telephone line to a multiplexer or other signal service.
data service unit (DSU)	Unit that connects a data terminal equipment (DTE) device—in this case, a Services Router—to a digital telephone line.
data terminal equipment–to–data communication equipment (DTE–DCE) interface	Interface that a Services Router (the DTE) uses to exchange information with a serial device such as a modem (the DCE). A DTE cable uses a male 9-pin or 25-pin connector, and a DCE cable uses a female 9-pin or 25-pin connector.
demand circuit	Interface configured for dial-on-demand routing backup. In OSPF, the demand circuit reduces the amount of OSPF traffic by removing all OSPF protocols when the routing domain is in a steady state.
dial backup	Feature that reestablishes network connectivity through one or more backup ISDN dialer interfaces after a primary interface fails. When the primary interface is reestablished, the ISDN interface is disconnected.
dial-in	Feature that enables J-series Services Routers to receive calls from the remote end of a backup ISDN connection. The remote end of the ISDN call might be a service provider, a corporate central location, or a customer premises equipment (CPE) branch office. All incoming calls can be verified against caller IDs configured on the router's dialer interface. See also *callback*.

Table 18: PIM and VoIP Module Terms *(continued)*

Term	Definition
dialer filter	Stateless firewall filter that enables dial-on-demand routing backup when applied to a physical ISDN interface and its dialer interface configured as a passive static route. The passive static route has a lower priority than dynamic routes. If all dynamic routes to an address are lost from the routing table and the router receives a packet for that address, the dialer interface initiates an ISDN backup connection and sends the packet over it. See also *dial-on-demand routing backup; floating static route*.
dial-on-demand-routing (DDR) backup	Feature that provides a J-series Services Router with full-time connectivity across an ISDN line. When routes on a primary serial T1, E1, T3, E3, Fast Ethernet, or PPPoE interface are lost, an ISDN dialer interface establishes a backup connection. To save connection time costs, the Services Router drops the ISDN connection after a configured period of inactivity. Services Router with ISDN interfaces support two types of dial-on-demand routing backup: on-demand routing with a dialer filter and dialer watch. See also *dialer filter; dialer watch*.
dialer watch	Dial-on-demand routing (DDR) backup feature that provides reliable connectivity without relying on a dialer filter to activate the ISDN interface. The ISDN dialer interface monitors the existence of each route on a watch list. If all routes on the watch list are lost from the routing table, dialer watch initiates the ISDN interface for failover connectivity. See also *dial-on-demand routing backup*.
“dying gasp” notification	Ability of a Services Router with a digital subscriber line (DSL) connection that has lost power to send a message informing the attached DSL access multiplexer (DSLAM) that it is about to go offline.
ePIM	Enhanced PIM. A particular type of high-speed PIM, such as the Gigabit Ethernet ePIM or 4-port Fast Ethernet ePIM, which can be inserted only in high-speed slots (slots 3 and 6 on a J4350 Services Router, or slots 2, 3, 5, and 6 on a J6350 Services Router).
floating static route	Route with an administrative distance greater than the administrative distance of the dynamically learned versions of the same route. The static route is used only when the dynamic routes are no longer available. When a floating static route is configured on an interface with a dialer filter, the interface can be used for backup.
ISDN S/T interface	Interface between an ISDN network and a network termination device consisting of two twisted pairs, one each for transmitting and receiving. The S/T interface usually resides in the customer premises and operates at 192 Kbps, of which ISDN traffic accounts for 144 Kbps.
ISDN U interface	Single twisted–pair interface line connecting the customer premises unit in an ISDN network to the central office. A U interface runs at 144 Kbps (128 Kbps for two B channels and 16 Kbps for the D channel).
plain old telephone service (POTS)	Standard telephone service that allows limited speed and bandwidth of 52 Kbps, which is also know as public switched telephone network (PSTN).
Primary Rate Interface (PRI)	ISDN service intended for higher-bandwidth applications than ISDN BRI. ISDN PRI consists of a single D-channel for control and signaling, plus a number of 64-Kbps B-channels—either 23 B-channels on a T1 line or 30 B-channels on an E1 line—to carry network traffic.
uPIM	Universal switching PIM. A particular type of PIM, such as the Gigabit Ethernet uPIM, which can be universally inserted in any slot on a J2320, J2350, J4350, or J6350 Services Router.

Field-Replaceable PIMs

PIMs are removable and insertable only when the Services Router is powered off. You can install a PIM into one of the slots in the router chassis. If a slot is not occupied by a PIM, a PIM blank panel must be installed to shield the empty slot and to allow cooling air to circulate properly through the router.

This section contains the following topics:

- J2320 and J2350 Field-Replaceable PIM Summary on page 46
- J4350 and J6350 Field-Replaceable PIM Summary on page 47
- 1-Port, 6-Port, 8-Port, and 16-Port Gigabit Ethernet uPIMs on page 49
- 1-Port Gigabit Ethernet ePIMs on page 52
- Dual-Port Serial PIM on page 55
- Dual-Port T1 or E1 PIM on page 56
- Dual-Port Channelized T1/E1/ISDN PRI PIM on page 57
- T3 or E3 PIM on page 59
- Dual-Port Fast Ethernet PIM on page 61
- 4-Port Fast Ethernet ePIM on page 62
- 4-Port ISDN BRI PIMs on page 63
- ADSL PIM on page 64
- G.SHDSL PIM on page 66

J2320 and J2350 Field-Replaceable PIM Summary

Table 19 on page 47 provides software release information, port numbers, and sample interface names for the field-replaceable PIMs supported on J2320 and J2350 Services Routers. The supported PIMs can be installed in any slot available on the J2320 and J2350 routers.



CAUTION: Do not install a combination of PIMs in a single chassis that exceeds the maximum power and heat capacity of the chassis. If J-series power management is enabled, PIMs that exceed the maximum power and heat capacity remain offline when the chassis is powered on.

To verify that the combination of PIMs to be installed in a chassis does not exceed the power and heat capacities for the J2320 or J2350 router, see “Planning for Power Management” on page 114.

NOTE: Although J2320 and J2350 Services Routers support PIMs that were introduced before the JUNOS 8.4 release, these routers do not support software releases earlier than JUNOS 8.4.

Table 19: J2320 and J2350 Field-Replaceable PIM Summary

PIM	Supported Software Releases for This PIM	Port Numbering	Sample Interface Name (type-pim/0/port)
1-Port SFP, 6-Port SFP, 8-Port, and 16-Port Gigabit Ethernet uPIMs	JUNOS 8.4 and later	Ports: ■ 0 ■ 0 through 5 ■ 0 through 7 ■ 0 through 15	ge-2/0/0
Dual-Port Serial PIM	JUNOS 8.4 and later	Ports—0 and 1	se-3/0/1
Dual-Port T1 or E1 PIM	JUNOS 8.4 and later	Ports—0 and 1	t1-0/0/1 or e1-0/0/1
Dual-Port Channelized T1/E1/ISDN PRI PIM	JUNOS 8.4 and later	Ports—0 and 1	ct1-0/0/0 ce1-0/0/0
4-Port ISDN BRI PIM	JUNOS 8.4 and later	Ports—0, 1, 2, and 3	br-1/0/2
ADSL PIM	JUNOS 8.4 and later	Port—0	at-2/0/0
G.SHDSL PIM	JUNOS 8.4 and later	Ports—0 and 1	at-1/0/0

J4350 and J6350 Field-Replaceable PIM Summary

Table 20 on page 48 provides software release information, slot and port numbers, and sample interface names for the field-replaceable PIMs supported on J4350, and J6350 Services Routers.

CAUTION: Do not install a combination of PIMs in a single chassis that exceeds the maximum power and heat capacity of the chassis. If J-series power management is enabled, PIMs that exceed the maximum power and heat capacity remain offline when the chassis is powered on.

To verify that the combination of PIMs to be installed in a chassis does not exceed the power and heat capacities for the J4350 or J6350 router, see “Planning for Power Management” on page 114.



NOTE: Although J4350 and J6350 Services Routers support PIMs that were introduced before the JUNOS 8.0 release, these routers do not support software releases earlier than JUNOS 8.0.

Table 20: J4350 and J6350 Field-Replaceable PIM Summary

PIM	Supported Software Releases for This PIM	Slot and Port Numbering	Sample Interface Name (type-pim/0/port)
1-Port SFP Gigabit Ethernet uPIM	JUNOS Enhanced Services 8.5 and later	Slots—1 through 6 Port—0	ge-2/0/0
6-Port SFP Gigabit Ethernet uPIM	JUNOS Enhanced Services 8.5 and later	Slots—1 through 6 Ports—0 through 5	ge-2/0/5
8-Port Gigabit Ethernet uPIM	JUNOS Enhanced Services 8.5 and later	Slots—1 through 6 Ports—0 through 7	ge-2/0/7
16-Port Gigabit Ethernet uPIM	JUNOS Enhanced Services 8.5 and later	Slots—1 through 6 Ports—0 through 15	ge-2/0/15
1-Port SFP Gigabit Ethernet ePIM	JUNOS Enhanced Services 8.5 and later	Can be installed in any high-speed slot, as follows: ■ J4350: Slots 3 and 6 Port—0 ■ J6350: Slots 2, 3, 5, and 6 Port—0	ge-3/0/0
Dual-Port Serial PIM	JUNOS Enhanced Services 8.5 and later	Slots—1 through 6 Ports—0 and 1	se-3/0/1
Dual-Port T1 or E1 PIM	JUNOS Enhanced Services 8.5 and later	Slots—1 through 6 Ports—0 and 1	t1-0/0/1 or e1-0/0/1
Dual-Port Channelized T1/E1/ISDN PRI PIM	JUNOS Enhanced Services 8.5 and later	Slots—1 through 6 Port—0 and 1	ct1-0/0/0 ce1-0/0/0
T3 or E3 PIM	JUNOS Enhanced Services 8.5 and later	Slots—1 through 6 Port—0	t3-0/0/0 or e3-2/0/0

Table 20: J4350 and J6350 Field-Replaceable PIM Summary *(continued)*

PIM	Supported Software Releases for This PIM	Slot and Port Numbering	Sample Interface Name (type-pim/0/port)
Dual-Port Fast Ethernet PIM	JUNOS Enhanced Services 8.5 and later	Slots—1 through 6 Ports—0 and 1	fe-1/0/0
4-port Fast Ethernet ePIM PIM	JUNOS Enhanced Services 8.5 and later	Can be installed in any high-speed slot, as follows: ■ J4350: Slots 3 and 6 Ports—0 through 3 ■ J6350: Slots 2, 3, 5, and 6 Ports—0 through 3	fe-3/0/0
4-Port ISDN BRI PIM	JUNOS Enhanced Services 8.5 and later	Slots—1 through 6 Ports—0, 1, 2, and 3	br-1/0/2
ADSL PIM	JUNOS Enhanced Services 8.5 and later	Slots—1 through 6 Port—0	at-2/0/0
G.SHDSL PIM	JUNOS Enhanced Services 8.5 and later	Slots—1 through 6 Ports—0 and 1	at-1/0/0
WXC Integrated Services Module (ISM200) **NOTE:** This module is not supported on J2320 routers.	JUNOS Enhanced Services 8.5 and later	Ports—0	wx-1/0/0

1-Port, 6-Port, 8-Port, and 16-Port Gigabit Ethernet uPIMs

Gigabit Ethernet uPIMs are supported on J2320, J2350, J4350, and J6350 Services Routers. Gigabit Ethernet uPIMs are available in four versions.

The 1-port and 6-port SFP Gigabit Ethernet uPIM, shown in Figure 22 on page 50 and Figure 23 on page 50, have small form-factor pluggable (SFP) transceivers to allow you to use different connectors. The optical SFP transceivers supported by these uPIMs are described in Table 22 on page 52

Figure 22: 1-Port Gigabit Ethernet uPIM

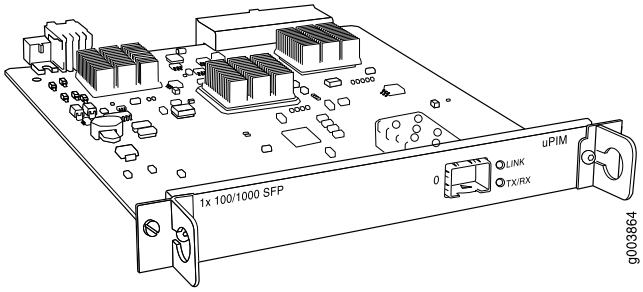

Figure 23: 6-Port Gigabit Ethernet uPIM

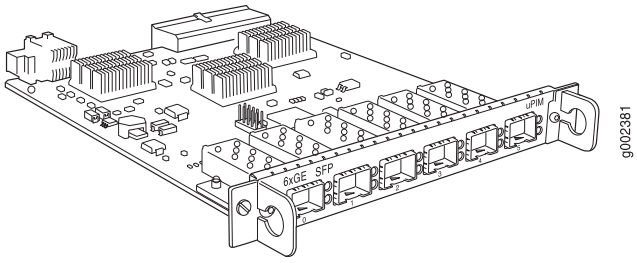

The 8-port and 16-port Gigabit Ethernet uPIMs, shown in Figure 24 on page 50 and Figure 25 on page 50, have RJ-45 connectors.

Figure 24: 8-Port Gigabit Ethernet uPIM

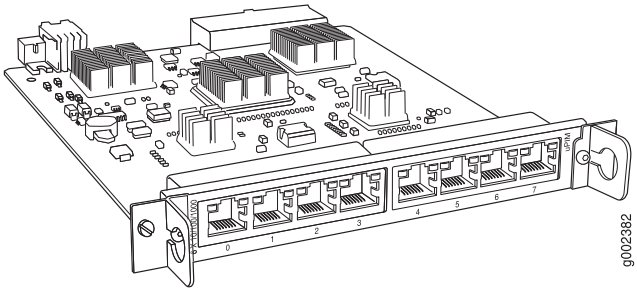

Figure 25: 16-Port Gigabit Ethernet uPIM

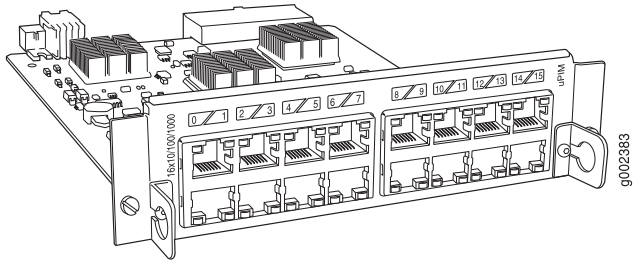

Features. Gigabit Ethernet uPIMs provide the following key features:

- The multiport uPIMs can be used as switches in the access layer (for connections to workstations and desktops). For more information, see the *J-series Services Router Basic LAN and WAN Access Configuration Guide*.
- Link speed for 8-port and 16-port Gigabit Ethernet uPIMs is configurable to 10, 100, or 1000 Mbps, and transmission mode is configurable to half or full duplex. The 1-port and 6-port SFP Gigabit Ethernet uPIMs cannot be manually configured—they are set at 1000 Mbps and full duplex.
- Autonegotiation.
- 1-port and 6-port Gigabit Ethernet uPIMs use SFP transceivers to allow different connectors to be used on uPIM ports. These SFP Gigabit Ethernet uPIMs support 1000Base-SX, 1000Base-LX, and 1000Base-T SFPs. They do not support 1000Base-LH SFPs.

  1000Base-SX and 1000Base-LX SFP transceivers have the following characteristics:

  - Duplex LC/PC connector (Rx and Tx).
  - Optical interface support—See Table 22 on page 52.

- 8-port and 16-port Gigabit Ethernet uPIMs—and SFPs on the 1-port and 6-port uPIMs—support 1000Base-T RJ-45 connectors.

  For pinouts of cable connectors for Gigabit Ethernet uPIMs, see "Gigabit Ethernet uPIM RJ-45 Connector Pinout" on page 237.

Limitations. Gigabit Ethernet uPIMs have the following limitations:

- Gigabit Ethernet uPIMs do not support SNMP.
- Gigabit Ethernet uPIM interfaces can be configured up to a maximum MTU size of 9014 bytes.

Installation. Gigabit Ethernet uPIMs can be inserted in any slot on J2320, J2350, J4350, or J6350 Services Routers.

Throughput for a uPIM is higher when it is inserted in a high-speed slot. High-speed slots are slots 3 and 6 on the J4350 router, and slots 2, 3, 5, and 6 on the J6350 router.

16-port Gigabit Ethernet uPIMs are two slots high. Because the connector on the PIM is on the lower half, the PIM occupies the slot that it is plugged into and the slot above it. Thus you cannot install a 16-port uPIM in the top slots of a router. For example, on a J4350 router you cannot install a 16-port uPIM in slots 1 and 4. If you install the PIM in slot 2, it occupies both slots 2 and 1.

To install or remove a PIM, see "Replacing a PIM" on page 176.

Interface LEDs. For 8-port and 16-port Gigabit Ethernet uPIMs, the activity LED is located on the left side of each port, and the link LED is located on the right side of each port. For the 6-port Gigabit Ethernet uPIM, the LEDs are located to the right of each port, with the link LED above the activity LED. LEDs on the 1-port uPIM are clearly labeled.Table 21 on page 52 describes the meaning of the LEDs.

Table 21: Gigabit Ethernet Port LEDs

Function	Color	State	Description
Link	Green	On steadily	Port is online.
	Unlit	Off	Port is offline.
Activity (TX/RX)	Green	Blinking	Port is transmitting or receiving traffic.
	Unlit	Off	Port might be online, but it is not receiving traffic.

For alarms, see the configuring and monitoring alarms information in the *J-series Services Router Administration Guide*.

Optical Interface Support. Table 22 on page 52 describes the optical interface support on the 1-port and 6-port Gigabit Ethernet uPIMs over single-mode fiber-optic (SMF) and multimode fiber-optic (MMF) cables.

Table 22: Optical Interface Support for SFP Gigabit Ethernet uPIMs

Parameter	1000Base-SX Transceiver	1000Base-LX Transceiver
Model number	JX-SFP-1GE-SX	JX-SFP-1GE-LX
Maximum distance	500 m (1640 ft) on 50/125-µm MMF cable 200 m (656 ft) on 62.5/125-µm MMF cable	10 km (6.2 mi) on 9/125-µm SMF cable 550 m (1894 ft) on MMF cable
Transmitter wavelength	830 nm through 860 nm	1270 nm through 1355 nm
Average launch power	–9.5 dBm through –4 dBm	For SMF cable: –9.5 dBm through –3 dBm For MMF cable: –11.5 dBm through –3 dBm
Receiver sensitivity	–21 dBm through –18 dBm	–25 dBm through –20.5 dBm

Copper Interface Support. The 1-port and 6-port Gigabit Ethernet uPIMs also support 1000Base-T SFPs (model number JX-SFP-1GE-T).

1-Port Gigabit Ethernet ePIMs

The 1-port Gigabit Ethernet ePIM is supported on J4350 and J6350 Services Routers and is available in two versions, one with copper connector (see Figure 26 on page 53), the other with small form-factor pluggable (SFP) transceivers (see Figure 27 on page 53).

Figure 26: Copper Gigabit Ethernet ePIM

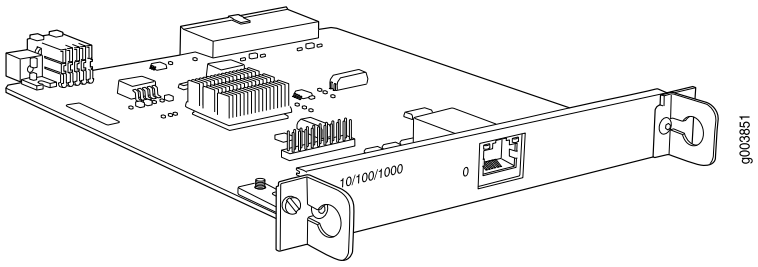

Figure 27: SFP Gigabit Ethernet ePIM

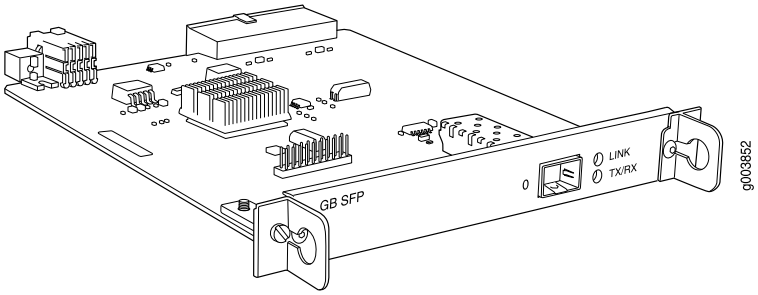

Features. The Gigabit Ethernet ePIM provides the following key features:

- Autonegotiation through medium-dependent interface (MDI) and MDI crossover (MDI-X) support.
- Link speeds for the Copper Gigabit Ethernet ePIM are configurable to 10, 100, or 1000 Mbps, and transmission mode is configurable to half or full duplex. The SFP Gigabit Ethernet ePIM cannot be manually configured—it is set at 1000 Mbps and full duplex.
- The SFP Gigabit Ethernet ePIM uses SFPs to allow different connectors to be used on the ePIM ports. The ePIM supports 1000Base-SX, 1000Base-LX, and 1000Base-T copper SFPs. It does not support 1000Base-LH SFPs.

  1000Base-SX and 1000Base-LX SFP transceivers have the following characteristics:

  - Duplex LC/PC connector (Rx and Tx).
  - Optical interface support—See Table 24 on page 54.

- Copper Gigabit Ethernet ePIM and 1000Base-T SFP transceivers have the following characteristics:

  - Connector: Four-pair, category 5 unshielded twisted-pair cable through an RJ-45 connector
  - Pinout: MDI crossover
  - Maximum distance: 100 m (328 ft)

For pinouts of cable connectors for Copper Gigabit Ethernet ePIMs, see “Gigabit Ethernet ePIM RJ-45 Connector Pinout” on page 238.

Limitations. The Gigabit Ethernet ePIM has the following limitations:

- Gigabit Ethernet ePIMs do not support SNMP.
- Configure Gigabit Ethernet ePIM interfaces up to a maximum MTU size of 9018 bytes.

Installation. You can install Gigabit Ethernet ePIMs in any high-speed slot as follows:

- J4350—Install up to two Gigabit Ethernet ePIMs in slots 3 and 6.
- J6350—Install up to four Gigabit Ethernet ePIMs in slots 2, 3, 5, and 6.



NOTE: High-speed slots are labeled with an **E** on the front-panel slot number diagram.

To install or remove a PIM, see "Replacing a PIM" on page 176.

Interface LEDs. The LINK and TX/RX LEDs indicate link status and activity. Table 23 on page 54 describes the meaning of the LEDs.

Table 23: Gigabit Ethernet Port LEDs

Function	Color	State	Description
LINK	Green	On steadily	Port is online.
	Unlit	Off	Port is offline.
TX/RX	Green	Blinking	Port is transmitting or receiving traffic.
	Unlit	Off	Port might be online, but it is not receiving traffic.

For alarms, see the configuring and monitoring alarms information in the *JUNOS Enhanced Services Administration Guide*.

Optical Interface Support. Table 24 on page 54 describes the optical interface support on the SFP Gigabit Ethernet ePIM over single-mode fiber-optic (SMF) and multimode fiber-optic (MMF) cables.

Table 24: Optical Interface Support for SFP Gigabit Ethernet ePIM

Parameter	1000Base-SX Transceiver	1000Base-LX Transceiver
Maximum distance	500 m (1640 ft) on 50/125-µm MMF cable	10 km (6.2 mi) on 9/125-µm SMF cable
	200 m (656 ft) on 62.5/125-µm MMF cable	550 m (1894 ft) on MMF cable
Transmitter wavelength	830 nm through 860 nm	1270 nm through 1355 nm

Table 24: Optical Interface Support for SFP Gigabit Ethernet ePIM *(continued)*

Parameter	1000Base-SX Transceiver	1000Base-LX Transceiver
Average launch power	–9.5 dBm through –4 dBm	For SMF cable: –9.5 dBm through –3 dBm For MMF cable: –11.5 dBm through –3 dBm
Receiver saturation	–3 dBm	–3 dBm
Receiver sensitivity	–18 dBm	–20.5 dBm

Dual-Port Serial PIM

The Dual-Port Serial PIM (Figure 28 on page 55) provides a physical connection to serial network media types through two serial interface ports.

Figure 28: Dual-Port Serial PIM

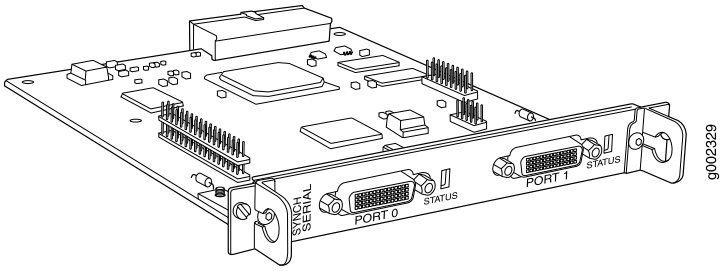

The Dual-Port Serial PIM provides the following key features:

- Onboard network processor
- Autoselection of operation modes based on data terminal equipment (DTE) or data communication equipment (DCE) cables
- Local and remote loopback diagnostics
- Configurable clock rate for the transmit (Tx) clock and receive (Rx) clock

For pinouts of cable connectors for serial PIMs, see “Serial PIM Cable Specifications” on page 227.

To install or remove a PIM, see “Replacing a PIM” on page 176.

Status LEDs indicate port status. Table 25 on page 56 describes the meaning of the LED states.

Table 25: Status LEDs for Serial Ports

Color	State	Description
Green	On steadily	Online with no alarms or failures.
Red	On steadily	Active with a local alarm. The router has detected a failure.
Unlit	Off	Offline.

For alarms, see the configuring and monitoring alarms information in the *J-series Services Router Administration Guide*.

Dual-Port T1 or E1 PIM

The Dual-Port T1 PIM (Figure 29 on page 56) and Dual-Port E1 PIM (Figure 30 on page 56) provide a physical connection to T1 or E1 network media types. Each PIM has two physical T1 or E1 ports with an integrated channel service unit (CSU) or data service unit (DSU).

Figure 29: Dual-Port T1 PIM

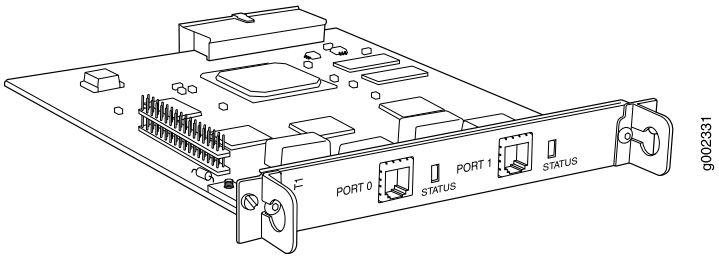

Figure 30: Dual-Port E1 PIM

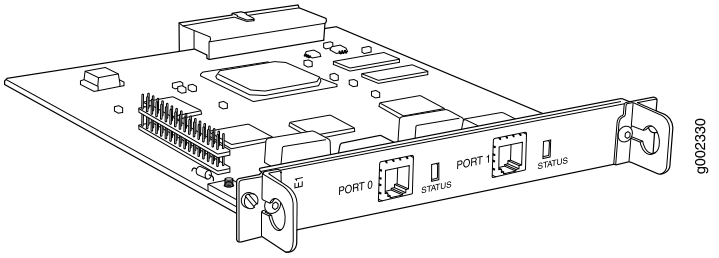

The Dual-Port T1 and E1 PIMs provides the following key features:

- Onboard network processor
- Integrated CSU/DSU—Eliminates the need for a separate external device
- 56-Kbps and 64-Kbps modes
- ANSI T1.102, T1.107, and T1.403 standards compliance
- G.703, G.704, and G.706 E1 standards compliance
- Independent internal and external clocking system
- Loopback, bit error rate test (BERT), T1 facilities data link (FDL), and long buildout diagnostics

For pinouts of cable connectors for T1 and E1 PIMs, see "E1 and T1 RJ-48 Cable Pinouts" on page 239.

To install or remove a PIM, see "Replacing a PIM" on page 176.

Status LEDs indicate port status. Table 26 on page 57 describes the meaning of the LED states.

Table 26: Status LEDs for T1 and E1 Ports

Color	State	Description
Green	On steadily	Online with no alarms or failures.
Red	On steadily	Active with a local alarm. The router has detected a failure.
Unlit	Off	Offline.

For alarms, see the configuring and monitoring alarms information in the *J-series Services Router Administration Guide*.

Dual-Port Channelized T1/E1/ISDN PRI PIM

The Dual-Port Channelized T1/E1/ISDN PRI PIM (Figure 31 on page 58) is a multiflex interface card that allows you to configure a single interface as a channelized T1 interface or a channelized E1 interface. You can also configure ISDN PRI services on a channelized T1 or E1 interface. The channelized T1/E1/ISDN PRI interface supports up to 24 DS0 channels on a T1 interface and up to 31 DS0 channels on an E1 interface, in addition to supporting the features of regular (unchannelized) T1 and E1 PIMs. Each interface can be configured as a single clear-channel, fractionalized, or channelized interface.



NOTE: You cannot configure a channelized T1/E1/ISDN PRI interface through a J-Web Quick Configuration page.

Figure 31: Channelized T1/E1/ISDN PRI PIM

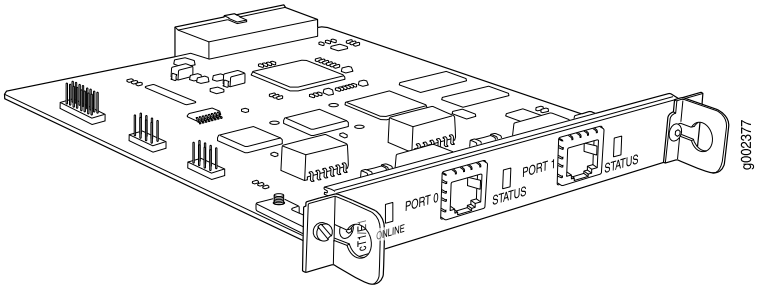

The Dual-Port Channelized T1/E1/ISDN PRI PIM provides the following key features:

- Onboard network processor
- Two-port channelization
- Interfaces that are software configurable as T1 or E1 channels or ISDN PRI B-channels
- Clear-channel, fractional, and channelized operation
- Lower latency due to the addition of a Freescale processor
- Maximum MTU value of 4500 bytes (for channelized T1 or E1 interface) and 4098 bytes (for ISDN PRI services)

NOTE: For a clear-channel T1 or E1 interface, the maximum MTU is 9150 bytes.

- 56-Kbps and 64-Kbps modes
- ANSI T1.102, T1.107, and T1.403 standards compliance
- G.703, G.704, and G.706 E1 standards compliance
- Independent internal and external clocking system
- Loopback, bit error rate test (BERT), T1 facilities data link (FDL), and long buildout diagnostics

For pinouts of cable connectors for channelized T1/E1/ISDN PRI PIMs, see "ISDN RJ-45 Connector Pinout" on page 243.

To install or remove a PIM, see "Replacing a PIM" on page 176.

Channelized T1/E1/ISDN PRI LEDs indicate PIM and port status. Table 27 on page 59 describes the meaning of the LED states.

NOTE: The STATUS LED displays channelized T1 or E1 port activity and alarms only. It does not display ISDN PRI B-channel or D-channel status.

Table 27: LEDs for Channelized T1/E1/ISDN PRI PIMs

Label	Color	State	Description
ONLINE	Green	On steadily	PIM is online and operational.
	Unlit	Off	PIM is not online.
STATUS	Green	On steadily	Port is online with no alarms or failures, and the physical layer is active.
	Red	Online	Port is active with a local alarm. The router has detected a failure and the physical layer is inactive.
	Yellow	Online	Port is online with alarms for remote failures.
	Unlit	Offline	Port is disabled.

For alarms, see the configuring and monitoring alarms information in the *J-series Services Router Administration Guide*.

T3 or E3 PIM

The T3 (also known as DS3) PIM (Figure 32 on page 59) and E3 PIM (Figure 33 on page 60) provide a physical connection to T3 or E3 network media types. The T3 and E3 PIMs include one physical T3 or E3 port with an integrated data service unit (DSU).

Figure 32: T3 PIM

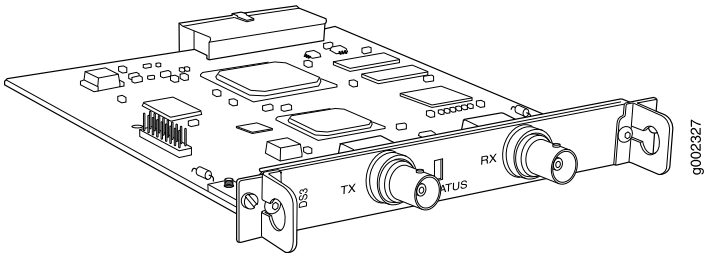

Figure 33: E3 PIM

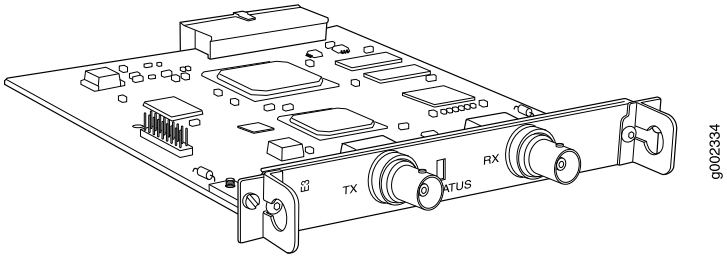

The T3 and E3 PIMs provide the following key features:

- Onboard network processor
- Integrated DSU—Eliminates the need for a separate external device
- Subrate and scrambling options with support for major DSU vendors
- Independent internal and external clocking system
- Loopback (payload–supported only on T3 PIM, local, and remote), bit error rate test (BERT), and T3 far-end alarm and control (FEAC) diagnostics

For pinouts of cable connectors for T3 and E3 PIMs, see "E3 and T3 BNC Connector Pinout" on page 242.

To install or remove a PIM, see "Replacing a PIM" on page 176.

Status LEDs indicate port status. Table 28 on page 60 describes the meaning of the LED states.

Table 28: Status LEDs for T3 and E3 Ports

Color	State	Description
Green	On steadily	Online with no alarms or failures.
Red	On steadily	Active with a local alarm. The router has detected a failure.
Yellow	On steadily	■ Loopback mode. ■ T3 (DS3)—Remote endpoint is in red alarm failure. ■ E3—Remote defect indication (RDI).
Unlit	Off	Offline.

For alarms, see the configuring and monitoring alarms information in the *J-series Services Router Administration Guide*.

Dual-Port Fast Ethernet PIM

The Dual-Port 10/100-Mbps Fast Ethernet PIM (Figure 34 on page 61) has two physical Fast Ethernet ports.

Figure 34: Fast Ethernet PIM

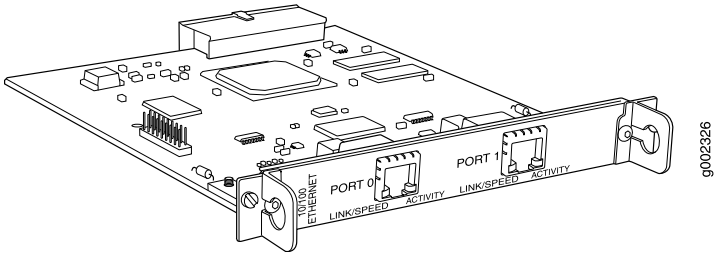

The Dual-Port Fast Ethernet PIM provides the following key features:

- Onboard network processor
- Full-duplex and half-duplex modes
- Media access control (MAC) address filtering
- Autonegotiation through medium-dependent interface (MDI) and MDI crossover (MDI–X) support

For pinouts of cable connectors for Fast Ethernet PIMs, see “Fast Ethernet RJ-45 Connector Pinout” on page 237.

To install or remove a PIM, see “Replacing a PIM” on page 176.

Fast Ethernet LEDs indicate link status, port speed, and activity. Table 29 on page 61 describes the meaning of the LEDs.

Table 29: LEDs for Dual-Port Fast Ethernet PIM

Label	Color	State	Description
LINK/SPEED	Green (100 Mbps) Yellow (10 Mbps)	On steadily	Online and link is active.
	Red	Disconnected	Link is unavailable.
ACTIVITY	Green	Blinking	Online with network traffic.
	Green	On steadily	Online without traffic.

For alarms, see the configuring and monitoring alarms information in the *J-series Services Router Administration Guide*.

4-Port Fast Ethernet ePIM

You can install 4-Port Fast Ethernet ePIMs in any of the high-speed slots, as follows:

- J4350—Install up to two 4-Port Fast Ethernet ePIMs in slots 3 and 6.
- J6350—Install up to four 4-Port Fast Ethernet ePIMs in slots 2, 3, 5, and 6.

NOTE: For 4-port Fast Ethernet ePIMs, if you apply a CoS scheduler map on outgoing (egress) traffic, the router does not divide the bandwidth appropriately among the CoS queues. As a workaround, configure enforced CoS shaping on the ports.

The 4-Port 10/100-Mbps Fast Ethernet ePIM, shown in Figure 35 on page 62, has four physical Fast Ethernet ports.

Figure 35: 4-Port Fast Ethernet ePIM

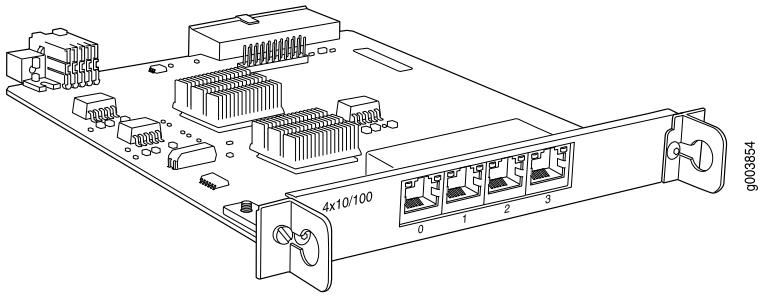

The 4-Port Fast Ethernet ePIM provides the following key features:

- Full-duplex and half-duplex modes.
- Autonegotiation through medium-dependent interface (MDI) and MDI crossover (MDI–X) support.

For pinouts of cable connectors for Fast Ethernet ePIMs, see “Fast Ethernet RJ-45 Connector Pinout” on page 237.

NOTE: 4-port Fast Ethernet ePIMs support a maximum frame size of 1514 bytes. Jumbo frames are not supported.

For information about installing and removing a PIM, see “Replacing a PIM” on page 176.

Fast Ethernet LEDs indicate link status and activity. Table 30 on page 63 describes the meaning of the LEDs.

Table 30: LEDs for 4-Port Fast Ethernet ePIM

Label	Color	State	Description
Link status (upper left)	Green	On steadily	Port is online.
	Unlit	Off	Port is offline.
Link activity (upper right)	Green	Blinking	Port is transmitting or receiving data.
	Unlit	Off	Port might be online, but it is not transmitting or receiving data.

For alarms, see the configuring and monitoring alarms information in the *J-series Services Router Administration Guide*.

4-Port ISDN BRI PIMs

The 4-port ISDN BRI PIMs have four physical ports that support the ISDN BRI S/T (Figure 36 on page 63) or ISDN BRI U (Figure 37 on page 63) interface type.

Figure 36: ISDN BRI S/T PIM

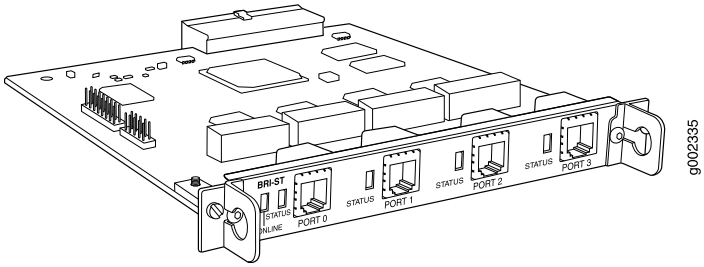

Figure 37: ISDN BRI U PIM

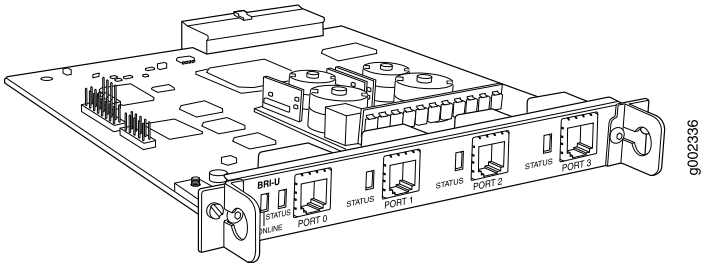

ISDN BRI PIMs provide the following key features:

- Onboard network processor
- Bandwidth on demand
- Dial backup
- Dial-on-demand routing backup (floating static and dialer watch)

For pinouts of cable connectors for ISDN PIMs, see "ISDN RJ-45 Connector Pinout" on page 243.

To install or remove a PIM, see "Replacing a PIM" on page 176.

ISDN LEDs indicate PIM and port status. Table 31 on page 64 describes the meaning of the LED states.

Table 31: LEDs for ISDN BRI S/T and U PIMs

Label	Color	State	Description
ONLINE	Green	Blinking	Call setup is successful on either the B1 or B2 channel.
	Green	On steadily	ISDN Layer 2 is active.
	Amber	On steadily	■ ISDN Layer 1 is active. ■ ISDN Layer 2 is unavailable.
	Red	Disconnected	■ BRI interface port is not connected. ■ ISDN Layer 1 is unavailable.
	Unlit	Off	BRI interface is offline.
STATUS	Green	On steadily	PIM is online and operational.
	Red	Disconnected	PIM is not operational and needs replacement.
	Unlit	Off	PIM is offline.

For alarms, see the configuring and monitoring alarms information in the *J-series Services Router Administration Guide*.

ADSL PIM

The ADSL PIM provides a single physical interface to asymmetric digital subscriber line (ADSL) network media types. The ADSL PIM, one supporting Annex A (Figure 38 on page 65) over plain old telephone service (POTS) and the other Annex B (Figure 39 on page 65) over ISDN, includes one physical ADSL port for an ATM-over-ADSL connection.

Figure 38: ADSL 2/2+ Annex A PIM

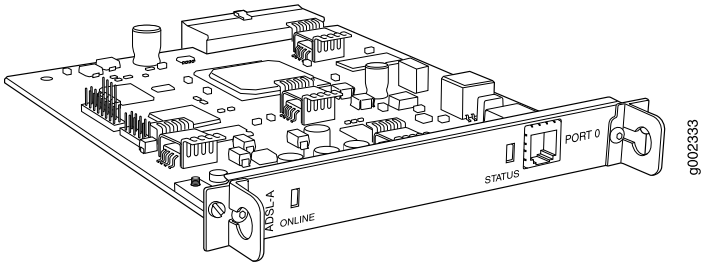

Figure 39: ADSL 2/2+ Annex B PIM

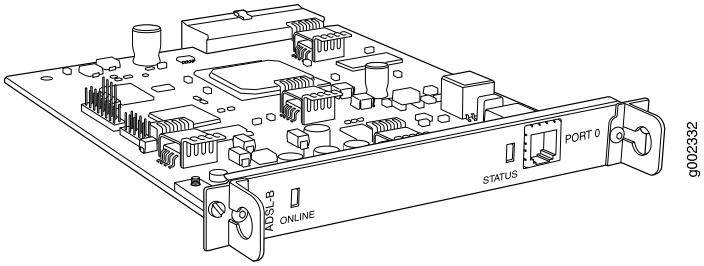

The ADSL PIM provides the following key features:

- Onboard network processor
- ADSL, ADSL2, and ADSL2 + protocols on the same PIM
- "Dying gasp" notification
- Asynchronous Transfer Mode (ATM) Adaptation Layer 5 (AAL5) encapsulation

For pinouts of cable connectors for ADSL PIMs, see "ADSL and G.SHDSL RJ-11 Connector Pinout" on page 242.

To install or remove a PIM, see "Replacing a PIM" on page 176.

The ADSL PIMs have two LEDs to indicate the status of the PIM and its port. Table 32 on page 65 describes the meaning of the LED states.

Table 32: LEDs for ADSL PIMs

Label	Color	State	Description
ONLINE	Green	On steadily	PIM passed the self-test and is online and operational.
	Unlit	Off	PIM is offline.
STATUS	Green	On steadily	Online with no alarms or failures.
	Red	On steadily	Active with local or remote alarms. The router has detected a failure.

For alarms, see the configuring and monitoring alarms information in the *J-series Services Router Administration Guide*.

G.SHDSL PIM

The G.SHDSL PIM (Figure 40 on page 66) provides symmetric high-speed digital subscriber line (SHDSL) physical interfaces to ATM network media types. The G.SHDSL PIM has two ports for ATM-over-SHDSL connections.

Figure 40: G.SHDSL PIM

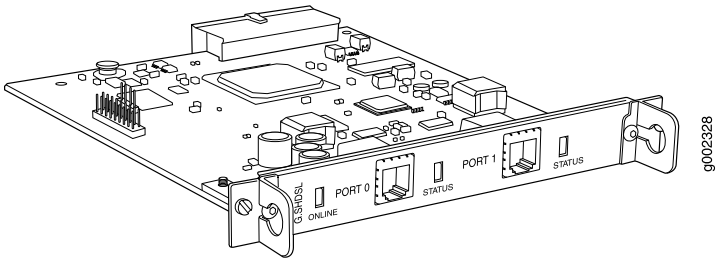

The G.SHDSL PIM supports the following key features:

- Onboard network processor
- 2-port two-wire mode and 1-port four-wire mode
- Programmable line rates in both modes:
  - 2-port two-wire mode supports autodetection of line rate and fixed line rates from 192 Kbps to 2.304 Mbps in 64-Kbps increments.
  - 1-port four-wire mode supports fixed line rates from 384 Kbps to 4.608 Mbps in 128-Kbps increments.
- 32 virtual channels per PIM
- ATM-over-G.SHDSL framing
- "Dying gasp" notification
- Local and remote loopback diagnostics
- ITU-T G.991.2, ITU-T G.994.1, and ITU-T G.997.1 standards compliance

NOTE: Payload loopback functionality is not supported on ATM-over-SHDSL interfaces.

For pinouts of cable connectors for G.SHDSL PIMs, see "ADSL and G.SHDSL RJ-11 Connector Pinout" on page 242.

To install or remove a PIM, see "Replacing a PIM" on page 176.

The G.SHDSL PIM has two LEDs to indicate the status of the PIM and its ports. Table 33 on page 67 describes the meaning of the LED states.

Table 33: LEDs for G.SHDSL PIMs

Label	Color	State	Description
ONLINE	Green	On steadily	Online with no alarms or failures.
	Red	Disconnected	Initialization of the PIM has failed.
	Unlit	Off	PIM is booting.
STATUS	Green	On steadily	Online with no alarms or failures.
	Red	On steadily	Active with a local alarm. The router has detected a failure.

For alarms, see the configuring and monitoring alarms information in the *J-series Services Router Administration Guide*.

Avaya VoIP Modules

The Avaya VoIP modules are installed in a J-series chassis like Physical Interface Modules (PIMs), but they are controlled by the Avaya Communication Manager software rather than the JUNOS software.

CAUTION: PIMs and VoIP modules are not hot-swappable. You must power off the Services Router before removing or inserting a PIM or VoIP module. Ensure that the PIMs and VoIP modules are installed in the router chassis before booting up the system.

CAUTION: The grounding cable for J-series routers must be, at minimum, 14 AWG cable. For more information, see "Chassis Grounding" on page 125.

Avaya VoIP modules are described in the following sections:

- Avaya VoIP Module Summary on page 68
- TGM550 Telephony Gateway Module on page 70
- TIM508 Analog Telephony Interface Module on page 74
- TIM510 E1/T1 Telephony Interface Module on page 75
- TIM514 Analog Telephony Interface Module on page 77
- TIM516 Analog Telephony Interface Module on page 78
- TIM518 Analog Telephony Interface Module on page 79
- TIM521 BRI Telephony Interface Module on page 81

Avaya VoIP Module Summary

Table 34 on page 68 and Table 35 on page 69 provide the module names, software release information, slot and port numbers, maximum number allowed on a chassis, and sample interface names (where applicable) for the Avaya VoIP modules.



CAUTION: Do not install a combination of PIMs in a single chassis that exceeds the maximum power and heat capacity of the chassis. If J-series power management is enabled, PIMs that exceed the maximum power and heat capacity remain offline when the chassis is powered on.

On each J-series Services Router with Avaya VoIP, a single TGM550 Telephony Gateway Module (TGM) and at least one telephony interface module (TIM) is required. No more than four TIMs of any kind can be installed on a single chassis.

Table 34: J2320 and J2350 Avaya VoIP Module Summary

PIM	Also Called	Software Release for This PIM	Slot and Port Numbering	Maximum Number on a Chassis	Sample Interface Name (type-pim/0/port)
TGM550 Telephony Gateway Module	■ TGM550 Gateway Module ■ TGM550	JUNOS 8.4 and later	■ J2320—Slots 1 through 3 ■ J2350—Slots 1 through 5	One (required) If more than one TGM550 is installed, only the one in the lowest-numbered slot is enabled. For example, if TGM550s are installed in slots 2 and 3, only the one in slot 2 is enabled.	vp-3/0/0 (See the interface naming conventions in the *J-series Services Router Basic LAN and WAN Access Configuration Guide*.)
TIM508 Analog Telephony Interface Module	■ TIM508 media module ■ TIM508	JUNOS 8.5 and later	■ J2320—Slots 1 through 3 ■ J2350—Slots 1 through 5	One on J2320 Three on J2350 (depends on other cards plugged-in and the Power Management implemented).	–
TIM510 E1/T1 Telephony Interface Module	■ TIM510 E1/T1 media module ■ TIM510	JUNOS 8.4 and later	■ J2320—Slots 1 through 3 ■ J2350—Slots 1 through 5	Two	–
TIM514 Analog Telephony Interface Module	■ TIM514 analog media module ■ TIM514	JUNOS 8.4 and later	■ J2320—Slots 1 through 3 ■ J2350—Slots 1 through 5	Two	–

Table 34: J2320 and J2350 Avaya VoIP Module Summary *(continued)*

PIM	Also Called	Software Release for This PIM	Slot and Port Numbering	Maximum Number on a Chassis	Sample Interface Name (type-pim/0/port)
TIM516 Analog Telephony Interface Module	■ TIM516 analog media module ■ TIM516	JUNOS 8.5 and later	■ J2320—Slots 1 through 3 ■ J2350—Slots 1 through 5	One on J2320 Three on J2350 (depends on other cards plugged-in and the Power Management implemented).	–
TIM518 Analog Telephony Interface Module	■ TIM518 analog media module ■ TIM518	JUNOS 8.5 and later	■ J2320—Slots 1 through 3 ■ J2350—Slots 1 through 5	One on J2320 Three on J2350 (depends on other cards plugged-in and the Power Management implemented).	–
TIM521 BRI Telephony Interface Module	■ TIM521 BRI media module ■ TIM521	JUNOS 8.4 and later	■ J2320—Slots 1 through 3 ■ J2350—Slots 1 through 5	Two	–

Table 35: J4350 and J6350 Avaya VoIP Module Summary

PIM	Also Called	Software Release for This PIM	Slot and Port Numbering	Maximum Number on a Chassis	Sample Interface Name (type-pim/0/port)
TGM550 Telephony Gateway Module	■ TGM550 Gateway Module ■ TGM550	JUNOS 8.2 and later	Slots 1 through 6	One (required) If more than one TGM550 is installed, only the one in the lowest-numbered slot is enabled. For example, if TGM550s are installed in slots 2 and 3, only the one in slot 2 is enabled.	vp-3/0/0 (See the interface naming conventions in the *J-series Services Router Basic LAN and WAN Access Configuration Guide*.)
TIM508 Analog Telephony Interface Module	■ TIM508 media module ■ TIM508	JUNOS 8.5 and later	Slots 1 through 6	Three	–

Table 35: J4350 and J6350 Avaya VoIP Module Summary *(continued)*

PIM	Also Called	Software Release for This PIM	Slot and Port Numbering	Maximum Number on a Chassis	Sample Interface Name (type-pim/0/port)
TIM510 E1/T1 Telephony Interface Module	■ TIM510 E1/T1 media module ■ TIM510	JUNOS 8.2 and later	Slots 1 through 6	Two	–
TIM514 Analog Telephony Interface Module	■ TIM514 analog media module ■ TIM514	JUNOS 8.2 and later	Slots 1 through 6	Four	–
TIM516 Analog Telephony Interface Module	■ TIM516 analog media module ■ TIM516	JUNOS 8.5 and later	Slots 1 through 6	Three	–
TIM518 Analog Telephony Interface Module	■ TIM518 analog media module ■ TIM518	JUNOS 8.5 and later	Slots 1 through 6	Three	–
TIM521 BRI Telephony Interface Module	■ TIM521 BRI media module ■ TIM521	JUNOS 8.2 and later	Slots 1 through 6	Two	–

TGM550 Telephony Gateway Module

The TGM550 Telephony Gateway Module (Figure 41 on page 71), also known as the TGM550 Gateway Module, has two analog telephone ports, two analog trunk ports, and a serial console port.

The TGM550 enables routers to provide VoIP services to telephones and trunks that do not directly support VoIP by translating voice and signaling data between VoIP and the system used by the telephones and trunks.

Figure 41: TGM550 Telephony Gateway Module

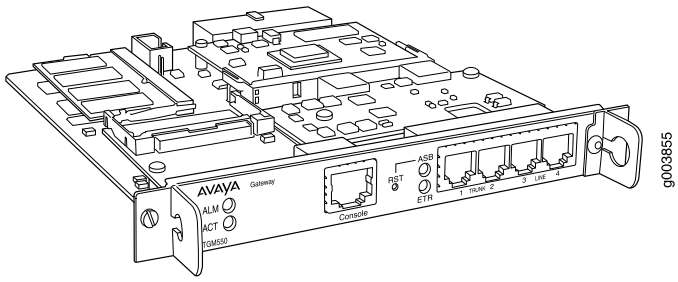

The TGM550 provides the following key features:

- Voice
  - VoIP Media Gateway services.
  - Two analog telephone (LINE) ports to support two analog telephones or incoming analog direct inward dialing (DID) trunks with either wink start or immediate start. An analog relay supports emergency transfer relay (ETR).
  - Two analog trunk (TRUNK) ports to support loop start, ground start, centralized automatic message accounting (CAMA), and direct inward and outward dialing (DIOD) (for Japan only) trunks.
  - Survivability features for continuous voice services.
  - Call center capabilities.
- Provisioning
  - Avaya Communication Manager (CM) media server management
  - Extensive alarm and troubleshooting features
- Survivability
  - Media Gateway Controller (MGC) automatic switchover, migration, and survivability features
  - Modem backup connection to the MGC
  - Dynamic call admission control (CAC) for WAN interfaces
- Management: One serial port for console access over an RJ-45 connector cable



NOTE: The RJ-45 console cable and DB-9 adapter supplied with the TGM550 are different from the RJ-45 cable and DB-9 adapter supplied with the Services Router for console connections to the Services Router. You cannot use the RJ-45 cable and DB-9 adapter supplied with the Services Router for console connections to the TGM550.

Table 36 on page 72 lists the maximum number of media servers, telephones, and so on that are supported by the TGM550 installed on a J4350 or J6350 or J2320 or J2350 Services Router.

Table 36: TGM550 Maximum Media Gateway Capacities

Hardware or Feature	TGM550 Maximum Capacity	Additional Information
TGM550s that can be controlled by an Avaya S8500 or S8700 Media Server	250	This number also applies if a combination of Avaya G700 Media Gateways, G250 Media Gateways, and G350 Media Gateways are controlled by the same media server.
TGM550s that can be controlled by an Avaya S8400 Media Server	5	This number also applies if a combination of Avaya G700 Media Gateways, G250 Media Gateways, and G350 Media Gateways are controlled by the same media server.
TGM550s that can be controlled by an Avaya S8300 Media Server	49	This capacity is 50 if a combination of Avaya G700 Media Gateways, G250 Media Gateways, and G350 Media Gateways are controlled by the same media server. The S8300 must reside in a G700 or G350 media gateway. Therefore, the maximum of 50 H.248 gateways supported by the S8300 means that only 49 of the 50 can be TGM550s.
Media servers that can be registered as Media Gateway Controllers (MGCs) on a TGM550	4	If an MGC becomes unavailable, the TGM550 uses the next MGC on the list. The built-in SLS module can be considered as a fifth MGC, although its functionality is limited than that of a full-scale media server.
Fixed analog line ports	2	—
Fixed analog trunk ports	2	—

Table 36: TGM550 Maximum Media Gateway Capacities *(continued)*

Hardware or Feature	TGM550 Maximum Capacity	Additional Information
Digital signal processors (DSPs)	1 (up to 80 channels)	The DSP supports: ■ 80 channels ■ 20 channels ■ 10 channels for calls using voice codec sets with 20-millisecond-or-higher packet sizes. For calls with 10-millisecond-or-lower packet sizes, the 80 channels DSP supports 40 channels. For TTY, fax, or modem over IP calls, the 80 channels DSP supports 40 channels.
Busy Hour Call Completion Rate (BHCC)	800	—
Total of IP and analog telephones that can be connected to a TGM550 and TIMs	70 (J4350) 100 (J6350)	Maximum includes a combination of analog and IP telephones
Touch-tone recognition (TTR)	32	Receivers
Tone generation	As much as necessary for all TDM calls.	—
Announcements (VAL)	16 playback channels for playing announcements, one of which can be used for recording 20 minutes for G711-quality stored announcements and music-on-hold. 256 maximum announcements stored	

CAUTION: Some capacities may change. For the most recent list, see the Avaya manual *System Capacities Table for Avaya Communication Manager on Avaya Media Servers*.

For pinouts of the TGM550 RJ-45 console connector, see “TGM550 Console Port Pinouts” on page 244. For pinouts of cable connectors for the TGM550 analog ports, see “TGM550 RJ-11 Connector Pinout for Analog Ports” on page 244.

To install or remove an Avaya VoIP module, see “Replacing a PIM” on page 176.

TGM550 LEDs indicate link status and activity. Table 37 on page 74 describes the meaning of the LEDs.

Table 37: LEDs for TGM550 Gateway Module

Label	Color	State	Description
ALM	Red	On steadily	Alarm. A failure in the TGM550 requires monitoring or maintenance.
ACT	Yellow	On steadily	Active. The TGM550 is online with network traffic.
ASB	Green	On steadily	Alternate software bank. The software is not running from the selected boot bank.
ETR	Green	On steadily	Emergency transfer relay (ETR) feature is active.

For more information about the TGM550, see the Avaya manual *Hardware Description and Reference for Avaya Communication Manager*.

TIM508 Analog Telephony Interface Module

The TIM508 Analog Telephony Interface Module (Figure 42 on page 74), also known as the TIM508 analog media module, has eight analog telephone lines that can be used as trunk ports.

Figure 42: TIM508 Analog Telephony Interface Module

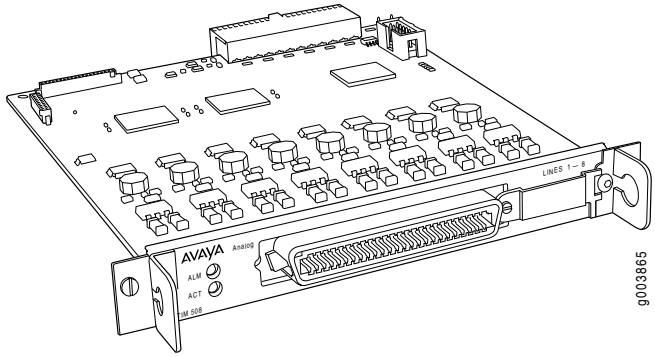

NOTE: All Eight analog lines can be configured as analog direct inward (DID) trunks.

You can configure TIM508 ports as described in Table 38 on page 74.

Table 38: TIM508 Possible Port Configurations

Possible Analog Telephone Line Configurations
Wink-start or immed-start DID trunk

Table 38: TIM508 Possible Port Configurations *(continued)*

Possible Analog Telephone Line Configurations
Analog tip/ring devices such as single-line telephones with or without LED message-waiting indication

The TIM508 also provides the following features:

- Three ringer loads, the ringer equivalency number for up to 2,000 ft (610 m), for all eight lines
- Up to eight simultaneously ringing lines
- Type 1 caller ID and Type 2 caller ID for lines
- Ring voltage generation for a variety of international frequencies and cadences

For pinouts of cable connectors for the TIM508, see "TIM508 Connector Pinout" on page 245.

To install or remove an Avaya VoIP module, see "Replacing a PIM" on page 176.

TIM508 LEDs indicate link status and activity. Table 39 on page 75 describes the meaning of the LEDs.

Table 39: LEDs for TIM508

Label	Color	State	Description
ALM	Red	On steadily	Alarm. A TIM508 failure requires monitoring or maintenance.
ACT	Yellow	Blinking	Active. A device connected to the TIM508 is in use. This situation can include a telephone that is off the hook.

For more information about the TIM508, see the Avaya manual *Hardware Description and Reference for Avaya Communication Manager*.

TIM510 E1/T1 Telephony Interface Module

The TIM510 E1/T1 Telephony Interface Module (Figure 43 on page 76), also known as the TIM510 E1/T1 media module, terminates an E1 or T1 trunk. The TIM510 T1/E1 media module has a built-in channel service unit (CSU) so an external CSU is not necessary. The CSU is used for a T1 circuit only. Up to two TIM510s can be installed in any of the slots on the Services Router.

Figure 43: TIM510 E1/T1 Telephony Interface Module

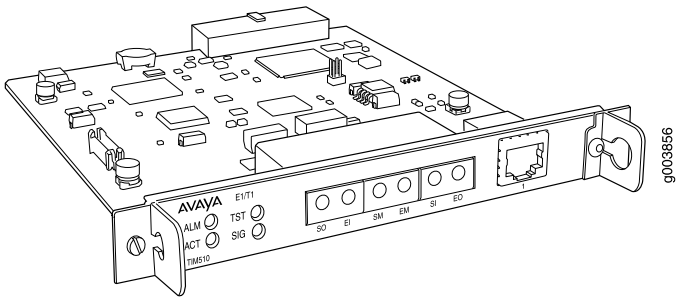

The TIM510 provides the following key features:

- 1 E1 or T1 trunk port with up to 30 channels on an E1 port and 24 channels on a T1 port.
- DS1-level support for a variety of E1 and T1 trunk types
- Trunk signaling to support U.S. and international central office (CO) or tie trunks
- Echo cancellation in either direction—incoming or outgoing

For pinouts of cable connectors for the TIM510, see "TIM510 RJ-45 Connector Pinout" on page 245.

To install or remove an Avaya VoIP module, see "Replacing a PIM" on page 176.

TIM510 LEDs indicate link status and activity. Table 40 on page 76 describes the meaning of the LEDs.

Table 40: LEDs for TIM510

Label	Color	State	Description
ALM	Red	On steadily	Alarm. A TIM510 failure requires monitoring or maintenance.
ACT	Green	On steadily	Active. The TIM510 is online with network traffic.
TST	Yellow	On steadily	Test. A test is being performed on the TIM510 through the Media Gateway Controller (MGC).
SIG	Green	On steadily	Signal. The link to the central office (CO) is active.

For more information about the TIM510, see the Avaya manual *Hardware Description and Reference for Avaya Communication Manager*.

TIM514 Analog Telephony Interface Module

The TIM514 Analog Telephony Interface Module (Figure 44 on page 77), also known as the TIM514 analog media module, has four analog telephone ports and four analog trunk ports.

Figure 44: TIM514 Analog Telephony Interface Module

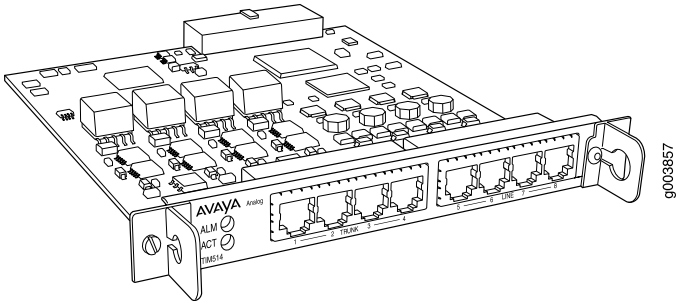

NOTE: For analog direct inward dialing (DID) trunks, you must use the four analog telephone (LINE) ports. You cannot use the four analog trunk (TRUNK) ports for analog DID trunks.

You can configure TIM514 ports as described in Table 41 on page 77.

Table 41: TIM514 Possible Port Configurations

Possible Analog Telephone (LINE) Port Configurations	Possible Analog Trunk (TRUNK) Port Configurations
Wink-start or immediate-start DID trunk	Loop-start or ground-start central office trunk with a loop current of 18 milliamperes (mA) to 120 mA
Analog tip/ring devices such as single-line telephones with or without LED message-waiting indication	Two-wire analog outgoing centralized automatic message accounting (CAMA) emergency E911 trunk, for connectivity to the PSTN Multifrequency (MF) signaling is supported for CAMA ports.

The TIM514 also provides the following features:

- Three ringer loads, the ringer equivalency number for up to 2,000 ft (610 m), for all eight ports
- Up to four simultaneously ringing ports
- Type 1 caller ID and Type 2 caller ID
- Ring voltage generation for a variety of international frequencies and cadences

For pinouts of cable connectors for the TIM514, see "TIM514 Connector Pinout" on page 246.

To install or remove an Avaya VoIP module, see “Replacing a PIM” on page 176.

TIM514 LEDs indicate link status and activity. Table 42 on page 78 describes the meaning of the LEDs.

Table 42: LEDs for TIM514

Label	Color	State	Description
ALM	Red	On steadily	Alarm. A TIM514 failure requires monitoring or maintenance.
ACT	Yellow	Blinking	Active. A device connected to the TIM514 is in use. This situation can include a telephone that is off the hook.

For more information about the TIM514, see the Avaya manual *Hardware Description and Reference for Avaya Communication Manager*.

TIM516 Analog Telephony Interface Module

The TIM516 Analog Telephony Interface Module (Figure 45 on page 78), also known as the TIM516 analog media module, has 16 analog telephone lines.

Figure 45: TIM516 Analog Telephony Interface Module

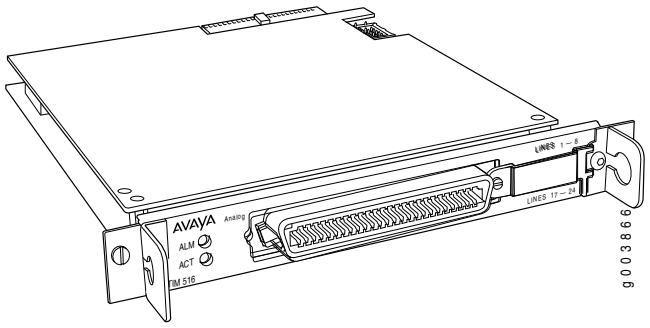

You can configure TIM516 lines as described in Table 43 on page 78.

Table 43: TIM516 Possible Port Configurations

Possible Analog Telephone (LINE) Line Configurations
Analog tip/ring devices such as single-line telephones with or without LED message-waiting indication

The TIM516 also provides the following features:

- Three ringer loads, the ringer equivalency number for up to 2,000 ft (610 m), for all 16 lines
- Up to 16 simultaneously ringing lines
- Type 1 caller ID and Type 2 caller ID for line lines
- Ring voltage generation for a variety of international frequencies and cadences

For pinouts of cable connectors for the TIM516, see "TIM516 Connector Pinout" on page 246.

To install or remove an Avaya VoIP module, see "Replacing a PIM" on page 176.

TIM516 LEDs indicate link status and activity. Table 44 on page 79 describes the meaning of the LEDs.

Table 44: LEDs for TIM516

Label	Color	State	Description
ALM	Red	On steadily	Alarm. A TIM516 failure requires monitoring or maintenance.
ACT	Yellow	Blinking	Active. A device connected to the TIM516 is in use. This situation can include a telephone that is off the hook.

For more information about the TIM516, see the Avaya manual *Hardware Description and Reference for Avaya Communication Manager*.

TIM518 Analog Telephony Interface Module

The TIM518 Analog Telephony Interface Module (Figure 46 on page 79), also known as the TIM518 analog media module, has eight analog telephone lines and eight analog trunk lines.

Figure 46: TIM518 Analog Telephony Interface Module

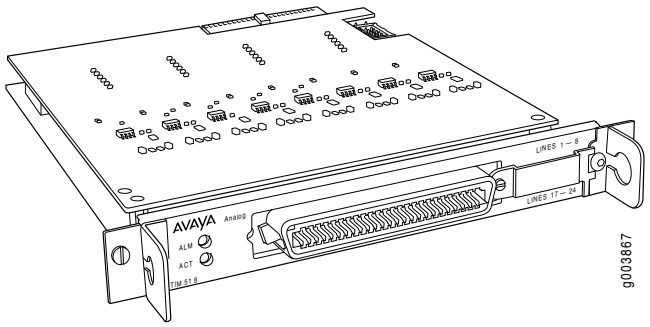

NOTE: For analog direct inward dialing (DID) trunks, you can use all the eight analog telephone lines.

You can configure first eight TIM518 analog telephone lines as described in Table 45 on page 80.

Table 45: TIM518 Possible Port Configurations

Possible Analog Telephone Port Configurations	Possible Analog Trunk (TRUNK) Port Configurations
Wink-start or immed-start DID trunk	Loop-start or ground-start central office trunk with a loop current of 18 milliamperes (mA) to 120 mA
Analog tip/ring devices such as single-line telephones with or without LED message-waiting indication	Two-wire analog outgoing centralized automatic message accounting (CAMA) emergency E911 trunk, for connectivity to the PSTN

The TIM518 also provides the following features:

- Three ringer loads, the ringer equivalency number for up to 2,000 ft (610 m), for all 16 lines
- Up to 16 simultaneously ringing lines
- Type 1 caller ID and Type 2 caller ID for line lines
- Type 1 caller ID for trunk lines
- Ring voltage generation for a variety of international frequencies and cadences

For pinouts of cable connectors for the TIM518, see "TIM518 Connector Pinout" on page 248.

To install or remove an Avaya VoIP module, see "Replacing a PIM" on page 176.

TIM518 LEDs indicate link status and activity. Table 46 on page 80 describes the meaning of the LEDs.

Table 46: LEDs for TIM518

Label	Color	State	Description
ALM	Red	On steadily	Alarm. A TIM518 failure requires monitoring or maintenance.
ACT	Yellow	Blinking	Active. A device connected to the TIM518 is in use. This situation can include a telephone that is off the hook.

For more information about the TIM518, see the Avaya manual *Hardware Description and Reference for Avaya Communication Manager*.

TIM521 BRI Telephony Interface Module

The TIM521 BRI Telephony Interface Module (Figure 47 on page 81), also known as the TIM521 BRI media module, has four ports with RJ-45 jacks that can be administered as ISDN Basic Rate Interface (BRI) trunk connections. Each ISDN BRI port has two B-channels plus a D-channel. Up to two TIM521s (with 4 BRI trunk ports each) can be installed in any of the slots on the Services Router.

Figure 47: TIM521 BRI Telephony Interface Module

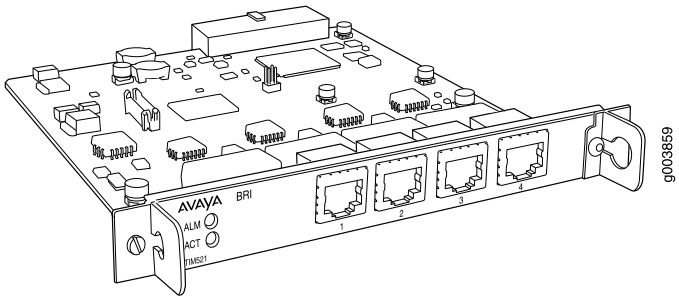

For ISDN BRI trunking, the TIM521 supports up to four BRI interfaces to the central office at the ISDN T reference point. Information is communicated on each port in two ways:

- Over two 64-Kbps B-channels, called B1 and B2, that can be circuit-switched simultaneously

NOTE: The TIM521 does not support BRI stations or combining both B-channels together to form a 128-Kbps channel.

- Over a 16-Kbps channel, called the D-channel, that is used for signaling. The TIM521 occupies one time slot for all four D-channels

The circuit-switched connections have an a-law or mu-law option for voice operation. The circuit-switched connections operate as 64-Kbps clear channels transmitting data.

For pinouts of cable connectors for the TIM521, see "TIM521 Connector Pinout" on page 249.

To install or remove an Avaya VoIP module, see "Replacing a PIM" on page 176.

TIM521 LEDs indicate link status and activity. Table 47 on page 82 describes the meaning of the LEDs.

Table 47: LEDs for TIM521

Label	Color	State	Description
ALM	Red	On steadily	Alarm. A TIM521 failure requires monitoring or maintenance.
ACT	Yellow	On steadily	Active. A trunk connected to the TIM521 is in use.

For more information about the TIM521, see the Avaya manual *Hardware Description and Reference for Avaya Communication Manager*.

Chapter 4

Services Router User Interface Overview

You can use two user interfaces to monitor, configure, troubleshoot, and manage a Services Router—the J-Web interface and the JUNOS command-line interface (CLI). This chapter contains the following topics:

- User Interface Overview on page 83
- Before You Begin on page 85
- Using the J-Web Interface on page 85
- Using the Command-Line Interface on page 94

User Interface Overview

This section contains the following topics:

- J-Web Overview on page 83
- CLI Overview on page 84

J-Web Overview

The J-Web interface allows you to monitor, configure, troubleshoot, and manage the Services Router by means of a Web browser enabled with Hypertext Transfer Protocol (HTTP) or HTTP over Secure Sockets Layer (HTTPS). J-Web provides access to all the configuration statements supported by the Services Router, so you can fully configure it without using the JUNOS CLI.

You can perform the following tasks with the J-Web interface:

- Monitoring—Display the current configuration and information about the system, interfaces, chassis, routing protocols, routing tables, routing policy filters, and other features.
- Configuring—View the current configurations at a glance, configure the Services Router, and manage configuration files. The J-Web interface provides the following different configuration methods:

- Configure the Services Router quickly and easily without configuring each statement individually.
- Edit a graphical version of the JUNOS CLI configuration statements and hierarchy.
- Edit the configuration in a text file.
- Upload a configuration file.

The J-Web interface also allows you to manage configuration history and set a rescue configuration.

- Diagnosing—Diagnose routing problems by running the ping or traceroute diagnostic tool. The diagnostic tools also allow you to capture and analyze control traffic on the routers.
- Managing—Manage log, temporary, and core (crash) files and schedule reboots on the J-series routers. On J-series routers, you can also manage software packages and licenses and copy a snapshot of the system software to a backup device.
- Configuring and monitoring events—Filter and view system log messages that record events occurring on the router. You can configure files to log system log messages and also assign attributes, such as severity levels, to messages.
- Configuring and monitoring alarms—On J-series routers only, monitor and diagnose the router by monitoring active alarms that alert you to the conditions on a network interface. You can also set the conditions that trigger alarms on an interface.

For more information about the J-Web interface, see "Using the J-Web Interface" on page 85.

CLI Overview

The CLI is a straightforward command interface in which you type commands on a line and press Enter to execute them. The CLI provides command help, command completion, and Emacs-style keyboard sequences for moving around on the command line and scrolling through a buffer of recently executed commands.

The CLI has two modes:

- Operational mode—Complete set of commands to control the CLI environment, monitor and troubleshoot network connectivity, manage the Services Router, and enter configuration mode.
- Configuration mode—Complete set of commands to configure the Services Router. This guide refers to configuration mode as the *CLI configuration editor*.

For more information about the CLI, see "Using the Command-Line Interface" on page 94.

Before You Begin

Before you start the user interface, you must perform the initial Services Router configuration described in "Establishing Basic Connectivity" on page 133. After the initial configuration, you use your username and password, and the hostname or IP address of the router, to start the user interface.

Using the J-Web Interface

This section contains the following topics:

- Starting the J-Web Interface on page 85
- J-Web Layout on page 86
- Elements of the J-Web Interface on page 87
- Navigating the J-Web Interface on page 90
- J-Web Sessions on page 93

For more information about using the J-Web interface, see the *J-Web Interface User Guide*.

Starting the J-Web Interface

To start the J-Web interface:

1. Launch your HTTP-enabled or HTTPS-enabled Web browser.

   To use HTTPS, you must have installed a certificate on the Services Router and enabled HTTPS.



NOTE: If the Services Router is running the worldwide version of the JUNOS software and you are using the Microsoft Internet Explorer Web browser, you must disable the Use SSL 3.0 option in the Web browser to access the Services Router.

2. After http:// or https:// in your Web browser, type the hostname or IP address of the Services Router and press Enter.

   The J-Web login page appears.

3. On the login page, type your username and password, and click **Log In**.

   To correct or change the username or password you typed, click **Reset**, type the new entry or entries, and click **Log In**.



NOTE: The default username is root with no password. You must change this during initial configuration or the system does not accept the configuration.

The J-Web **Quick Configuration > Set Up** or **Monitor > System** page appears.

To explicitly terminate a J-Web session at any time, click **Logout** in the top pane.

J-Web Layout

Each page of the J-Web interface is divided into the following panes, as shown in Figure 48 on page 87.

- Top pane—Displays identifying information and links.
- Main pane—Location where you monitor, configure, diagnose, and manage the Services Router by entering information in text boxes, making selections, and clicking buttons.
- Side pane—Displays subtasks of the Monitor, Configuration, Diagnose, or Manage task currently displayed in the main pane. For the configuration editor, this pane displays the hierarchy of configuration statements committed on the router. Click an item to access it in the main pane.
- Bottom pane—Displays copyright and trademark information.

Figure 48: J-Web Layout

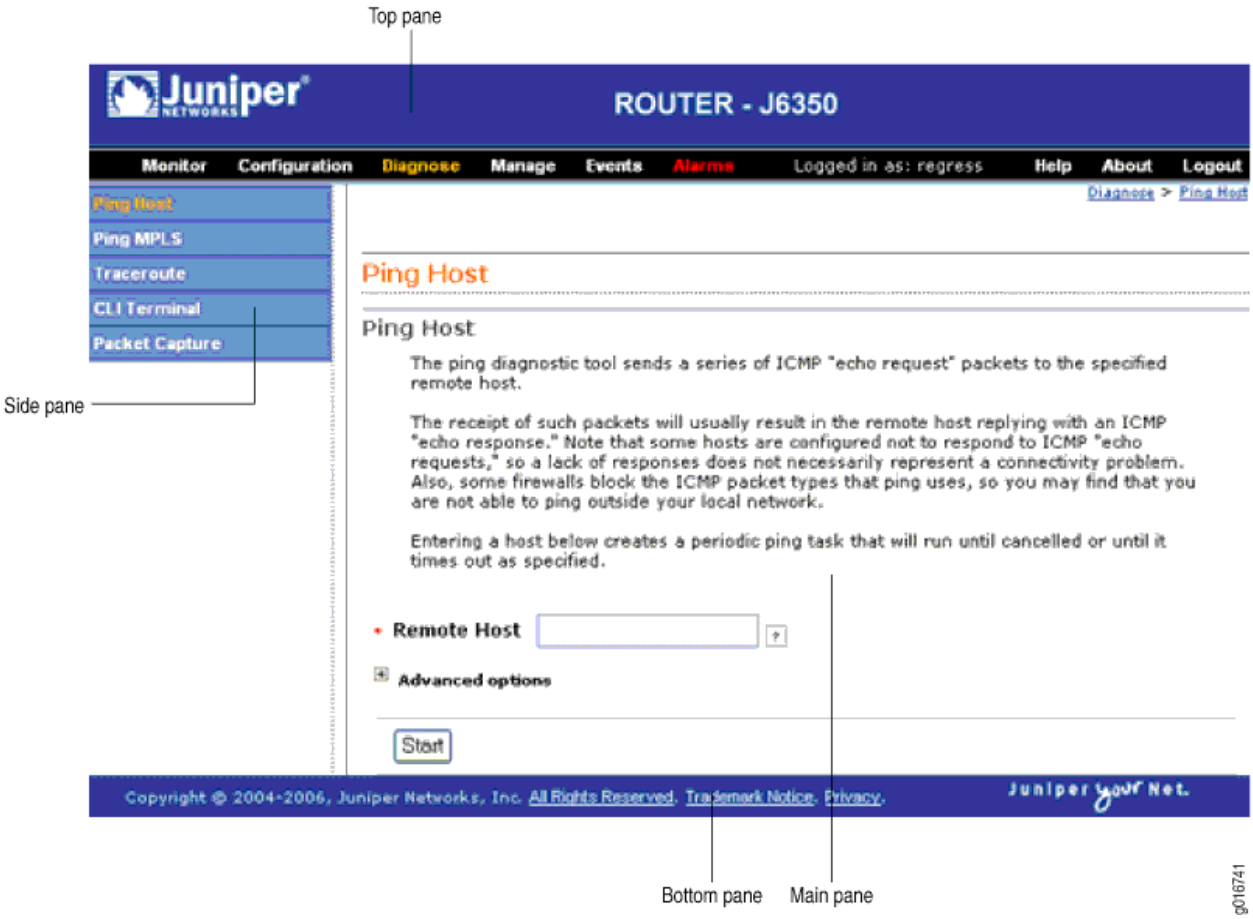

Elements of the J-Web Interface

This section summarizes the elements of the top pane, side pane, and main pane of the J-Web interface.

Top Pane Elements

The top pane comprises the elements shown in Figure 49 on page 88.

Figure 49: Top Pane Elements

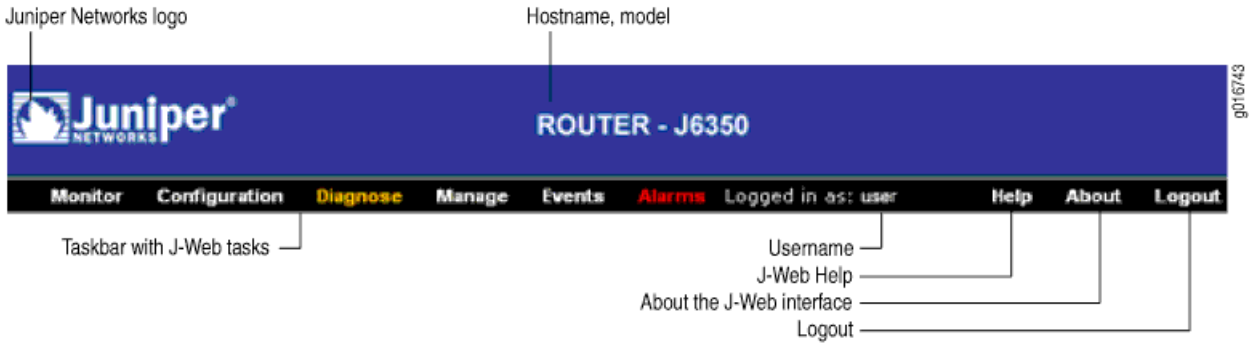

- Juniper Networks logo—Link to http://www.juniper.net in a new browser window.
- *hostname – model*—Hostname and model of the Services Router.
- Logged in as: *username*—Username you used to log in to the Services Router.
- Help—Link to context-sensitive help information.
- About—Link to information about the J-Web interface, such as the version number.
- Logout—Ends your current login session with the Services Router and returns you to the login page.
- Taskbar—Menu of J-Web tasks. Click a J-Web task to access it.
  - **Monitor**—View information about configuration and hardware on the Services Router.
  - **Configuration**—Configure the Services Router with Quick Configuration or the configuration editor, and view configuration history.
  - **Diagnose**—Troubleshoot network connectivity problems.
  - **Manage**—Manage files and licenses, upgrade software, and reboot the Services Router.
  - **Events**—View events and set up filters for an event summary.
  - **Alarms**—View the alarm summary.

Main Pane Elements

The main pane comprises the elements shown in Figure 50 on page 89.

Figure 50: Main Pane Elements

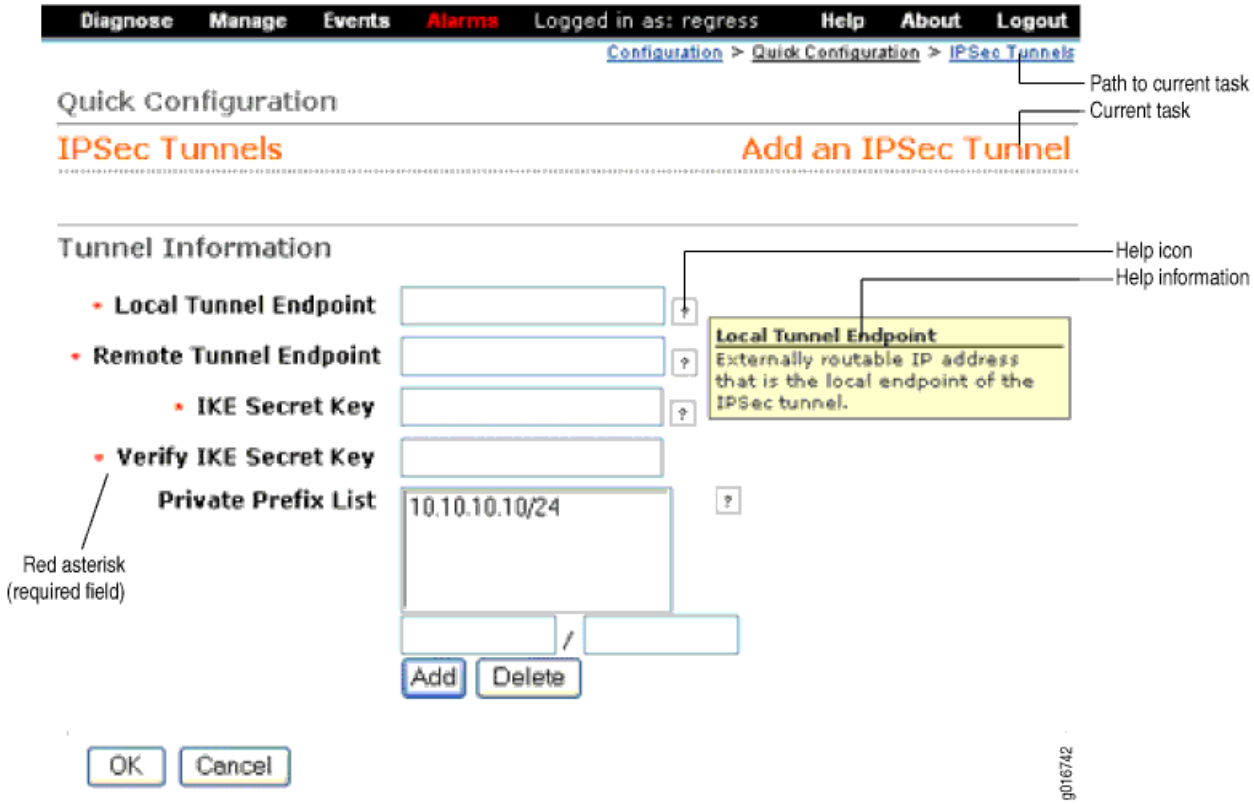

- Help (?) icon—Displays useful information when you move the cursor over the question mark. This help displays field-specific information, such as the definition, format, and valid range of the field.
- Red asterisk (*)—Indicates a required field.
- Path to current task—Shows the successive J-Web tasks and subtasks you selected to display the current main and side panes. Click a task to return to it.
- Icon Legend— For the Edit Configuration subtask (J-Web configuration editor) only, explains icons that appear in the user interface to provide information about configuration statements:
  - C—Comment. Move your cursor over the icon to view a comment about the configuration statement.
  - I—Inactive. The configuration statement does not affect the Services Router.
  - M—Modified. The configuration statement is added or modified.
  - *—Mandatory. The configuration statement must have a value.

Side Pane Elements

The side pane comprises the elements shown in Figure 51 on page 90.

Figure 51: Side Pane Elements

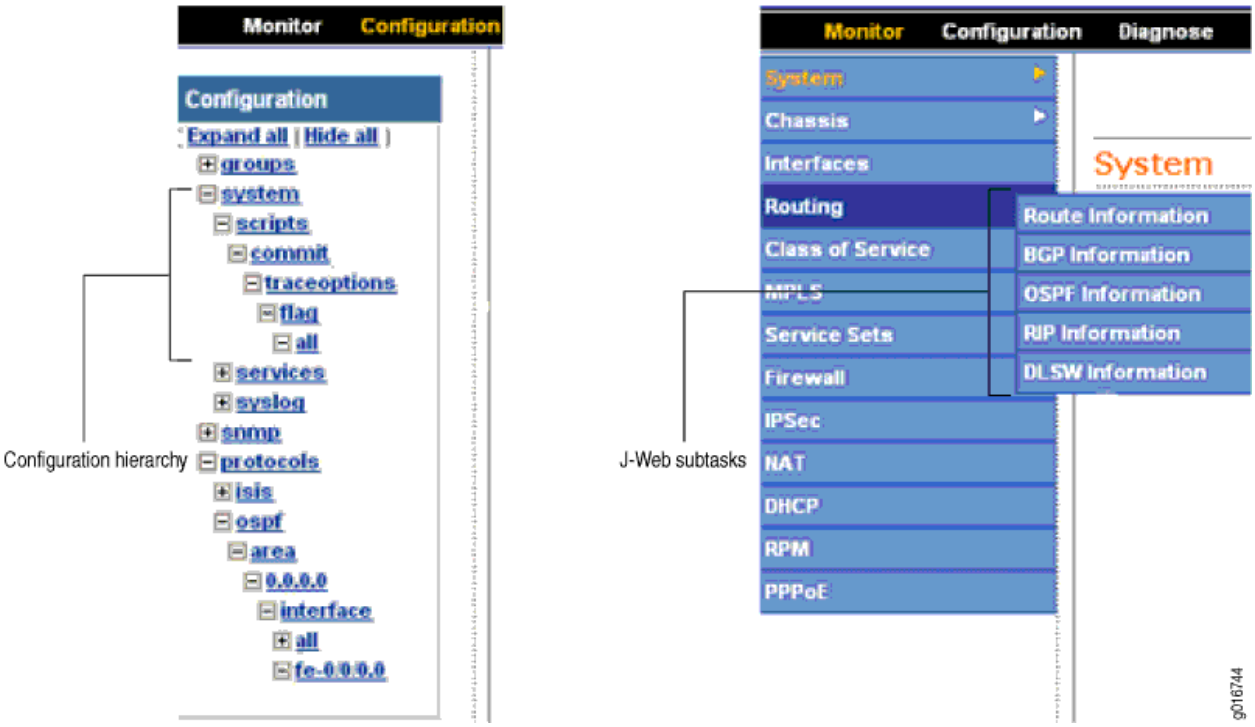

- Subtask—Displays options related to the selected task in the J-Web taskbar.
- Configuration hierarchy—For the J-Web configuration editor, displays the hierarchy of committed statements in the Services Router configuration.
  - Click **Expand all** to display the entire hierarchy.
  - Click **Hide all** to display only the statements at the top level.
  - Click plus signs (+) to expand individual items.
  - Click minus signs (–) to hide individual items.

Navigating the J-Web Interface

The layout of the panes allows you to quickly navigate through the interface. You navigate the J-Web interface, move forward and backward, scroll pages, and expand and collapse elements as you do in a typical Web browser interface.

From the taskbar, select the J-Web task that you want to perform. Selecting the task displays related subtasks in the side pane. When you select a subtask, related fields are displayed in the main pane. By default, the system selects the first subtask and displays its related fields in the main pane. The side pane and taskbar are available from all pages, allowing you to skip from one task or subtask to the other from any page in the interface.

The path displayed in the top right corner of each page provides a context. Use this path to see your location in a configuration hierarchy. Clicking any link in the path displays the corresponding page.

You can easily navigate to most subtasks by selecting them from the side pane. On pages where you are required to take an action, buttons and links allow you to move to the next or previous page as you perform certain actions. Most buttons and links are self-explanatory. But some buttons have different functions on the Quick Configuration and Edit Configuration (J-Web configuration editor) pages. For more information, see "Navigating the Quick Configuration Pages" on page 91 and "Navigating the J-Web Configuration Editor" on page 91.

Navigating the Quick Configuration Pages

Table 48 on page 91 describes the functions of key Quick Configuration buttons.

Table 48: J-Web Quick Configuration Buttons

Function	Button
Commit your entries into the configuration, and return to the previous J-Web page.	**OK**
Clear the entries you have not yet applied to the configuration, and return to the previous J-Web page.	**Cancel**
Commit your entries into the configuration, and stay on the same J-Web page.	**Apply**

Navigating the J-Web Configuration Editor

When you select **Edit Configuration** (J-Web configuration editor), the side pane displays the top level of the configured hierarchy committed on the Services Router. The main pane displays the configuration hierarchy options.

As you navigate through the configuration, the hierarchy level is displayed at the top of the main pane. You can click a statement or identifier displayed in the main pane, or in the hierarchy in the left pane, to display the corresponding configuration options in the main pane.

After typing or selecting your configuration edits, click a button in the main pane (described in Table 49 on page 91) to move to the previous page after applying, committing, or canceling the configuration. An updated configuration does not take effect until you commit it.

Table 49: Key J-Web Edit Configuration Buttons

Function	Button
Apply edits to the candidate configuration, and return one level up (previous page) in the configuration hierarchy.	**OK**

Table 49: Key J-Web Edit Configuration Buttons *(continued)*

Function	Button
Clear the entries you have not yet applied to the candidate configuration, and return one level up (previous page) in the configuration hierarchy.	**Cancel**
Verify edits and apply them to the current configuration file running on the Services Router.	**Commit**

Getting J-Web Help

The J-Web interface provides two ways to display Help for the Monitor, Quick Configuration, Diagnose, Manage, Events, and Alarms tasks. For Help on the View and Edit configuration tasks, see the related documentation provided in the "Related Juniper Networks Documentation" on page xviii.

To get Help in the J-Web interface:

- Field-sensitive Help—Move the cursor over the question mark (**?**) next to the field for which you want more information. The system displays useful information about the field. Typically, this Help includes one line of information about what this field does or what you must enter in a given text box. For example, Help for the Peer Autonomous System Number field states, "the value should be a number between 1 and 65535."
- Context-sensitive Help—Click **Help** in the taskbar to open a separate page displaying the summary of all the fields on that page. To exit Help, close the page. You can navigate Help pages using hypertext links connecting related topics, or click the following options (if available) at the top and bottom of each page. Figure 52 on page 93 shows Help for the CoS Configuration page.
  - **Prev**—Access the previous page.
  - **Next**—Access the next page.
  - **Report an Error**—Access a form for providing feedback.

Figure 52: CoS Help Page

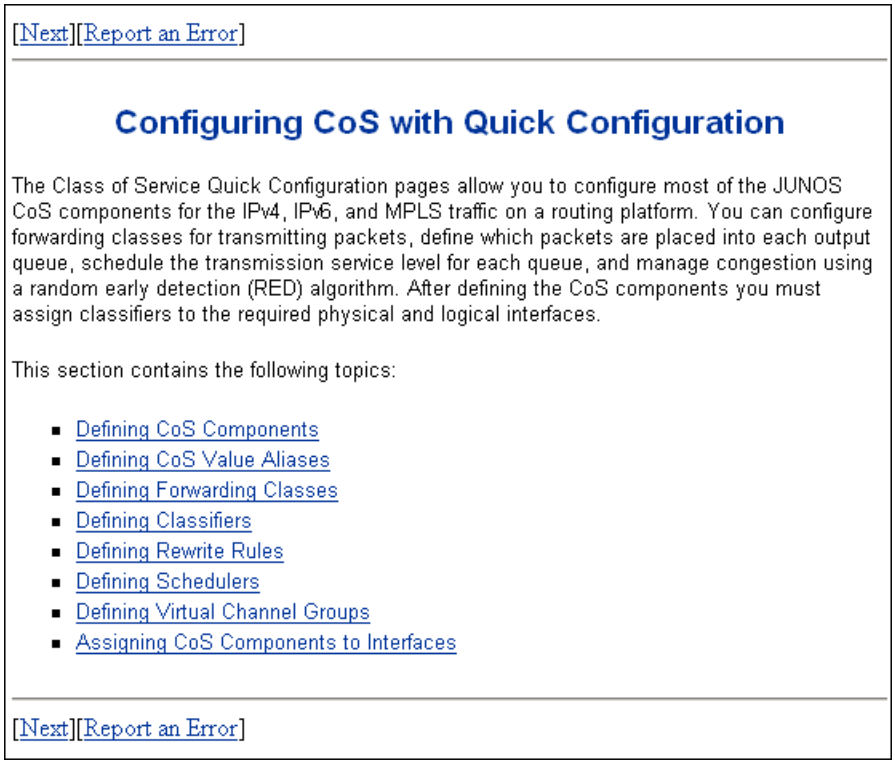

J-Web Sessions

You establish a J-Web session with the Services Router through an HTTP-enabled or HTTPS-enabled Web browser. The HTTPS protocol, which uses 128-bit encryption, is available only in domestic versions of the JUNOS software. To use HTTPS, you must have installed a certificate on the Services Router and enabled HTTPS.

When you attempt to log in through the J-Web interface, the Services Router authenticates your username with the same methods used for Telnet and SSH.

The Services Router can support multiple J-Web sessions for a single user who logs in to each session. However, if a single user attempts to launch multiple J-Web *windows*—for example, by right-clicking a link to launch another instance of a Web browser—the session can have unpredictable results.

If the Services Router does not detect any activity through the J-Web interface for 15 minutes, the session times out and is terminated. You must log in again to begin a new session.

To explicitly terminate a J-Web session at any time, click **Logout** in the top pane.

Using the Command-Line Interface

This section contains the following topics:

- CLI Command Hierarchy on page 94
- Starting the CLI on page 95
- CLI Operational Mode on page 95
- CLI Configuration Mode on page 96
- CLI Basics on page 97

For more information about the CLI, see the *JUNOS CLI User Guide*.

CLI Command Hierarchy

The CLI commands are organized hierarchically, with commands that perform a similar function grouped together under the same level. For example, all commands that display information about the Services Router system and system software are grouped under the show command, and all commands that display information about the routing table are grouped under the show route command. Figure 53 on page 94 illustrates a portion of the show command hierarchy.

Figure 53: CLI Command Hierarchy Example

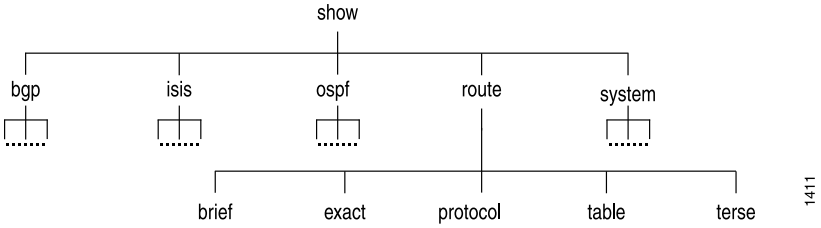

To execute a command, you enter the full command name, starting at the top level of the hierarchy. For example, to display a brief view of the routes in the routing table, use the command show route brief.

The hierarchical organization results in commands that have a regular syntax and provides the following features that simplify CLI use:

- Consistent command names—Commands that provide the same type of function have the same name, regardless of the portion of the software they are operating on. For example, all show commands display software information and statistics, and all clear commands erase various types of system information.
- Lists and short descriptions of available commands—Information about available commands is provided at each level of the CLI command hierarchy. If you type a question mark (?) at any level, you see a list of the available commands along with a short description of each command.
- Command completion—Command completion for command names (keywords) and command options is also available at each level of the hierarchy. If you type a partial command name followed immediately by a question mark (with no

intervening space), you see a list of commands that match the partial name you typed.

Starting the CLI

To start the CLI:

1. Establish a connection with the Services Router:
   - To access the router remotely from the network, enter the command you typically use to establish a remote connection (such as Telnet or ssh) using the router hostname.
   - To access the router through a management device attached to the console port, start the terminal application.
   - To access the router through the J-Web interface, select **Diagnose > CLI Terminal** in the J-Web interface. For more information, see the *J-Web Interface User Guide*.
2. Log in using your username and password.

   After you log in, you enter a UNIX shell.
3. Start the CLI.

```
% cli
user@host>
```

The presence of the angle bracket (>) prompt indicates the CLI has started. By default, the prompt is preceded by a string that contains your username and the hostname of the router.

To exit the CLI and return to the UNIX shell, enter the quit command.

CLI Operational Mode

The CLI has two modes: *operational* and *configuration*. When you log in to the Services Router and the CLI starts, you are at the top level of operational mode.

To view a list of top-level operational mode commands, type a question mark (?) at the command-line prompt.

```
user@host> ?
Possible completions:
  clear               Clear information in the system
  configure           Manipulate software configuration information
  file                Perform file operations
  help                Provide help information
  monitor             Show real-time debugging information
  mtrace              Trace multicast path from source to receiver
  ping                Ping remote target
  quit                Exit the management session
  request             Make system-level requests
  restart             Restart software process
```

```
  set                  Set CLI properties, date/time, craft interface message
  show                 Show system information
  ssh                  Start secure shell on another host
  start                Start shell
  telnet               Telnet to another host
  test                 Perform diagnostic debugging
  traceroute           Trace route to remote host
```

At the top level of operational mode are a number of broad groups of CLI commands that are used to perform the following functions:

- Control the CLI environment.
- Monitor and troubleshoot the router.
- Connect to other systems.
- Manage files and software images.
- Control software processes.
- Stop and reboot the router.
- Enter configuration mode.

To control the CLI environment, see "Configuring the CLI Environment" on page 100. To enter configuration mode, see "CLI Configuration Mode" on page 96. For information about the other CLI operational mode functions, see the *J-series Services Router Administration Guide*.

CLI Configuration Mode

To configure the Services Router, including system parameters, routing protocols, interfaces, network management, and user access, you must enter configuration mode. In configuration mode, the CLI provides commands to configure the router, load a text (ASCII) file that contains the router configuration, activate a configuration, and save the configuration to a text file.

You enter configuration mode by entering the configure operational mode command. The CLI prompt changes from user@host> to user@host#.

To view a list of configuration mode commands, type a question mark (?) at the command-line prompt. (You do not need to press Enter after typing the question mark.)

```
user@host# ?
Possible completions:
  Enter                Execute this command
  activate             Remove the inactive tag from a statement
  annotate             Annotate the statement with a comment
  commit               Commit current set of changes
  copy                 Copy a statement
  deactivate           Add the inactive tag to a statement
  delete               Delete a data element
  edit                 Edit a sub-element
  exit                 Exit from this level
  help                 Provide help information
```

```
insert              Insert a new ordered data element
load                Load configuration from ASCII file
quit                Quit from this level
rename              Rename a statement
rollback            Roll back to previous committed configuration
run                 Run an operational-mode command
save                Save configuration to ASCII file
set                 Set a parameter
show                Show a parameter
status              Show users currently editing configuration
top                 Exit to top level of configuration
up                  Exit one level of configuration
wildcard            Wildcard operations
```

The JUNOS software configuration consists of a hierarchy of *statements*. There are two types of statements: *container statements*, which contain other statements, and *leaf statements*, which do not contain other statements. All the container and leaf statements together form the configuration hierarchy.

Each statement consists of a fixed keyword and, optionally, an identifier that you define, such as the name of an interface or a username.

To configure the Services Router or to modify an existing configuration, you add statements to the configuration with the edit and set configuration mode commands. For more information about the CLI configuration editor and configuration mode, see the *J-series Services Router Basic LAN and WAN Access Configuration Guide* and the JUNOS software configuration guides.

CLI Basics

This section contains the following topics:

- Editing Keystrokes on page 97
- Command Completion on page 98
- Online Help on page 99
- Configuring the CLI Environment on page 100

Editing Keystrokes

In the CLI, you use keystrokes to move around on and edit the command line, and to scroll through a list of recently executed commands. Table 50 on page 98 lists some typical CLI editing tasks and the keystrokes that perform them.

Table 50: CLI Editing Keystrokes

Task Category	Action	Keyboard Sequence
Move the cursor.	Move the cursor back one character.	Ctrl-b
	Move the cursor back one word.	Esc b
	Move the cursor forward one character.	Ctrl-f
	Move the cursor forward one word.	Esc f
	Move the cursor to the end of the command line.	Ctrl-e
Delete characters.	Delete the character before the cursor.	Ctrl-h, Delete, or Backspace
	Delete the character at the cursor.	Ctrl-d
	Delete all characters from the cursor to the end of the command line.	Ctrl-k
	Delete all characters on the command line.	Ctrl-u or Ctrl-x
	Delete the word before the cursor.	Ctrl-w or Esc Backspace
	Delete the word after the cursor.	Esc d
Insert recently deleted text.	Insert the most recently deleted text at the cursor.	Ctrl-y
Redraw the screen.	Redraw the current line.	Ctrl-l
Display previous command lines.	Scroll backward through the list of recently executed commands.	Ctrl-p
	Scroll forward through the list of recently executed commands.	Ctrl-n
	Search the CLI history in reverse order for lines matching the search string.	Ctrl-r
	Search the CLI history by typing some text at the prompt, followed by the keyboard sequence. The CLI attempts to expand the text into the most recent word in the history for which the text is a prefix.	Esc /
Repeat keyboard sequences.	Specify the number of times to execute a keyboard sequence. Replace *number* with a number from 1 through 9, and replace *sequence* with a keyboard sequence in this table.	Esc *number sequence*

Command Completion

You do not always have to remember or type the full command or option name for the CLI to recognize it. To display all possible command or option completions, type the partial command followed immediately by a question mark (?).

To complete a command or option that you have partially typed, press Tab or Spacebar. If the partially typed letters uniquely identify a command, the complete command name appears. Otherwise, a message indicates that your entry is ambiguous or invalid. Possible command completions are displayed if your entry is ambiguous.

You can also use command completion on filenames and usernames. To display all possible values, type one or more characters followed immediately by a question mark. To complete these partial entries, press Tab only. Pressing Spacebar does not work.

Online Help

The CLI provides context-sensitive help at every level of the command hierarchy. The help information tells you which commands are available at the current level in the hierarchy and provides a brief description of each.

To get help while in the CLI, type a question mark (?) in one of the following ways:

- Type a question mark at the command-line prompt. The CLI lists the available commands and options. For examples, see "CLI Operational Mode" on page 95 and "CLI Configuration Mode" on page 96.
- Type a question mark after entering the complete name of a command or command option. The CLI lists the available commands and options, then redisplays the command names and options that you typed:

```
user@host> request ?

Possible completions:
  chassis              Perform chassis-specific operations
  ipsec                Perform IP Security operations
  message              Send text message to other users
  routing-engine       Log in to Routing Engine
  security             Perform security-level operations
  services             Perform service application operations
  support              Perform JUNOS support tasks
  system               Perform system-level operations
user@host> request
```

- Type a question mark in the middle of a command name. The CLI lists possible command completions that match the letters you have entered so far, then redisplays the letters that you typed. For example, to list all operational mode commands that start with the letter **s**, type the following:

```
user@host> s?

Possible completions:
  set                  Set CLI properties, date/time, craft interface
message
  show                 Show system information
  ssh                  Start secure shell on another host
  start                Start shell
user@host> s
```

When you enter the help commands described in Table 51 on page 100, the CLI displays usage guidelines and summary information for configuration statements and operational mode commands. You can enter help commands in operational or configuration mode.

Table 51: help Commands

CLI Command	Description
help apropos *string*	Displays help based on a text string contained in a statement or command name. If the string contains spaces, enclose it in quotation marks. You also can specify a regular expression for the string, using standard UNIX-style regular expression syntax. In configuration mode, this command displays statement names and help text that match the string specified. In operational mode, this command displays the following types of commands that match the string specified, plus help text: ■ Operational mode commands ■ help topic and help reference commands you can enter for more information For example, to get a list of statements that contain the string traps, enter the help apropos traps command in configuration mode.
help reference *string*	Displays summary information for configuration statements. For example, to display summary information for the OSPF hello interval, enter the command help reference ospf hello-interval.
help topic *string*	Displays usage guidelines for configuration statements. For example, to display usage guidelines for the OSPF hello interval, enter the command help topic ospf hello-interval.

Configuring the CLI Environment

You can configure the CLI environment for your current login session. Your settings are not retained when you exit the CLI.

To display the current CLI settings, enter the show cli command:

```
user@host> show cli
CLI complete-on-space set to on
CLI idle-timeout disabled
CLI restart-on-upgrade set to on
CLI screen-length set to 49
CLI screen-width set to 132
CLI terminal is 'vt100'
CLI is operating in enhanced mode
CLI working directory is '/cf/var/home/remote'
```

To change the CLI environment, use the set cli operational mode command:

```
user@host> set cli ?
Possible completions:
  complete-on-space    Set whether typing space completes current word
  directory            Set working directory
  idle-timeout         Set maximum idle time before login session ends
  prompt               Set CLI command prompt string
  restart-on-upgrade   Set whether CLI prompts to restart after software upgrade

  screen-length        Set number of lines on screen
  screen-width         Set number of characters on a line
  terminal             Set terminal type
```

Table 52 on page 101 shows how you can change the CLI environment features.

Table 52: Configuring the CLI Environment

Environment Feature	CLI Command	Default Setting	Options
Command completion	set cli complete-on-space (on | off)	on—Pressing Tab or Spacebar completes a command.	■ Set off to allow only Tab for command completion. ■ Set on to re-enable Tab and Spacebar for command completion.
Your working directory	set cli directory *path*8	/cf/var/home/remote	Replace *path* with the directory you want to enter when you log in to the Services Router.
Minutes of idle time	set cli idle-time *minutes*	Your session never times out unless your login class specifies a timeout.	■ To enable the timeout feature, replace *timeout* with a value between 1 and 100,000. ■ To disable the timeout feature, replace *timeout* with 0.
Your session prompt	set cli prompt *string*	*user@host* >	Replace *string* with the prompt you want. If the prompt contains spaces or special characters, enclose *string* in quotation marks (“ “).
Restart-after-upgrade prompt	set cli restart-on-upgrade (on | off)	CLI prompts you to restart the Services Router after a software upgrade.	■ Set off to disable the prompt for the session. ■ Set on to reenable the prompt.
Number of CLI output line displayed at once	set cli screen-length *length*	Variable (depends on terminal type).	■ To change the number of lines displayed on the screen, replace *length* with a value between 1 and 100,000. ■ To disable the display of a set number of lines, replace *length* with 0. (This feature can be useful when you are issuing CLI commands from scripts.)

Table 52: Configuring the CLI Environment *(continued)*

Environment Feature	CLI Command	Default Setting	Options
Number of CLI characters displayed on a line	set cli screen-width *width*	Variable (depends on terminal type).	To change the number of characters displayed on a line, replace *width* with a value between 0 and 100,000.
Your terminal type.	set cli terminal *terminal-type*	unknown, or set by console.	Replace *terminal-type* with one of the following values: ■ ansi ■ vt100 ■ small-xterm ■ xterm

Part 2
Installing a Services Router

- Preparing for Router Installation on page 105
- Installing and Connecting a Services Router on page 119
- Establishing Basic Connectivity on page 133
- Configuring Secure Web Access on page 155
- Installing and Managing J-series Licenses on page 163

Chapter 5

Preparing for Router Installation

Before installing a J-series Services Router, make sure that your site has the proper operating environment and equipment. Use the checklist at the end of the chapter to help you prepare your site.

This chapter discusses the following topics:

- General Site Guidelines on page 105
- Rack Requirements on page 106
- Router Environmental Tolerances on page 108
- Fire Safety Requirements on page 108
- Power Guidelines, Requirements, and Specifications on page 109
- Network Cable Specifications on page 117
- ISDN Provisioning on page 117
- Site Preparation Checklist on page 117

General Site Guidelines

The following precautions help you plan an acceptable operating environment for your Services Router and avoid environmentally caused equipment failures:

- For the cooling system to function properly, the airflow around the chassis must be unrestricted. Ensure that there is adequate circulation in the installation location. In J2320 and J2350 routers, allow at least 6 in. (15.2 cm) of clearance between the left and right sides of the chassis and adjacent equipment. In J4350 and J6350 routers, allow at least 6 in. (15.2 cm) of clearance between the front and back of the chassis and adjacent equipment.
- Follow ESD procedures described in "Preventing Electrostatic Discharge Damage" on page 255, to avoid damaging equipment. Static discharge can cause components to fail completely or intermittently over time.
- Install blank PIM panels in empty slots, to prevent any interruption or reduction in the flow of air across internal components.

Rack Requirements

J-series Services Routers must be installed in a rack. Many types of racks are acceptable, including front-mount racks, four-post (telco) racks, and center-mount racks.

The following sections describe rack requirements:

- Rack Size and Strength for J2320 and J2350 Routers on page 106
- Rack Size and Strength for J4350 and J6350 Routers on page 107
- Connection to Building Structure on page 107

Rack Size and Strength for J2320 and J2350 Routers

The J2320 and j2350 Services Routers are designed for installation in a rack that complies with either of the following standards:

- A 19-in. rack as defined in Cabinets, Racks, Panels, and Associated Equipment (document number EIA-310-D) published by the Electronics Industry Association (http://www.eia.org)
- A 600-mm rack as defined in the four-part *Equipment Engineering (EE); European telecommunications standard for equipment practice* (document numbers ETS 300 119-1 through 119-4) published by the European Telecommunications Standards Institute (http://www.etsi.org)

  The horizontal spacing between the rails in a rack that complies with this standard is usually wider than the router's mounting ears, which measure 19 in. (48.2 cm) from outer edge to outer edge. Use approved wing devices to narrow the opening between the rails as required.

The rack rails must be spaced widely enough to accommodate the router chassis's external dimensions:

- J2320 chassis—1.75 in. (4.45 cm) high, 17.51 in. (44.48 cm) wide, and 15.1 in. (38.35 cm) deep.
- J2350 chassis—2.61 in. (6.63 cm) high, 17.51 in. (44.48 cm) wide, and 15.1 in. (38.35 cm) deep.

The outer edges of the mounting ears extend the width of either chassis to 19 in. (48.2 cm), and the front of the chassis extends approximately 0.78 in. (1.98 cm) beyond the mounting ears. The spacing of rails and adjacent racks must also allow for the clearances around the router and rack. (See “General Site Guidelines” on page 105.)



CAUTION: If you are mounting the router in a cabinet, be sure that ventilation is sufficient to prevent overheating.

If a front-mount rack is used, we recommend supporting the back of the router with a shelf or other structure.

The J2320 chassis height of 1.75 in. (4.45 cm) equals 1 U. The J2350 chassis height of 2.61 in. (6.63 cm) equals 1.5 U. Each *U* is a standard rack unit defined in *Cabinets, Racks, Panels, and Associated Equipment* (document number EIA-310-D) published by the Electronics Industry Association.

Rack Size and Strength for J4350 and J6350 Routers

The Services Router is designed for installation in a rack that complies with either of the following standards:

- A 19-in. rack as defined in Cabinets, Racks, Panels, and Associated Equipment (document number EIA-310-D) published by the Electronics Industry Association (http://www.eia.org)
- A 600-mm rack as defined in the four-part *Equipment Engineering (EE); European telecommunications standard for equipment practice* (document numbers ETS 300 119-1 through 119-4) published by the European Telecommunications Standards Institute (http://www.etsi.org)

  The horizontal spacing between the rails in a rack that complies with this standard is usually wider than the router's mounting ears, which measure 19 in. (48.2 cm) from outer edge to outer edge. Use approved wing devices to narrow the opening between the rails as required.

The rack rails must be spaced widely enough to accommodate the router chassis's external dimensions: 3.44 in. (8.74 cm) high, 17.44 in. (44.3 cm) wide, and 21.13 in. (53.67 cm) deep.

The outer edges of the mounting ears extend the width of either chassis to 19.44 in. (48.38 cm), and the front of the chassis extends approximately 0.5 in. (1.27 cm) beyond the mounting ears. The spacing of rails and adjacent racks must also allow for the clearances around the router and rack. (See "General Site Guidelines" on page 105.)



CAUTION: If you are mounting the router in a cabinet, be sure that ventilation is sufficient to prevent overheating.

If a front-mount rack is used, we recommend supporting the back of the router with a shelf or other structure.

The J4350, and J6350 chassis height of 3.44 in. (8.74 cm) equals 2 U. Each *U* is a standard rack unit defined in *Cabinets, Racks, Panels, and Associated Equipment* (document number EIA-310-D) published by the Electronics Industry Association.

Connection to Building Structure

Always secure the rack to the structure of the building. If your geographical area is subject to earthquakes, bolt the rack to the floor. For maximum stability, also secure the rack to ceiling brackets. For more information, see "Rack-Mounting Requirements and Warnings" on page 272.

Router Environmental Tolerances

Table 53 on page 108 specifies the environmental conditions required for normal Services Router operation. In addition, the site must be as dust-free as possible. Dust can clog air intake vents, reducing cooling system efficiency. Check vents frequently, cleaning them as necessary.

Table 53: Router Environmental Tolerances

Description	Value
Altitude	No performance degradation to 10,000 ft (3048 m)
Relative humidity	Normal operation ensured in relative humidity range of 5% to 90%, noncondensing
Temperature	Normal operation ensured in temperature range of 0°C (32°F) to 40°C (104°F) Non-operating storage temperature in shipping carton: –40°C (–40°F) to 70°C (158°F)
Seismic	Designed to meet Telcordia Technologies Zone 4 earthquake requirements
Maximum thermal output	■ J2320 chassis: 1091 BTU/hour (320 W) ■ J2350 chassis: 1195 BTU/hour (350 W) ■ J4350 chassis: 1092 BTU/hour (320 W) ■ J6350 chassis: 1126 BTU/hour (330 W)

Fire Safety Requirements

In the event of a fire emergency involving Services Routers and other network equipment, the safety of people is the primary concern. Establish procedures for protecting people in the event of a fire emergency, provide safety training, and properly provision fire-control equipment and fire extinguishers.

In addition, establish procedures to protect your equipment in the event of a fire emergency. Juniper Networks products must be installed in an environment suitable for electronic equipment. We recommend that fire suppression equipment be available in the event of a fire in the vicinity of the equipment, and that all local fire, safety, and electrical codes and ordinances be observed when you are installing and operating your equipment.

Fire Suppression

In the event of an electrical hazard or an electrical fire, first unplug the power cord. (For shutdown instructions, see “Powering a Services Router On and Off” on page 131.)

Then, use a Type C fire extinguisher, which uses noncorrosive fire retardants, to extinguish the fire. For more information about fire extinguishers, see “Fire Suppression Equipment” on page 109.

Fire Suppression Equipment

Type C fire extinguishers, which use noncorrosive fire retardants such as carbon dioxide (CO_2) and Halotron, are most effective for suppressing electrical fires. Type C fire extinguishers displace the oxygen from the point of combustion to eliminate the fire. For extinguishing fire on or around equipment that draws air from the environment for cooling, use this type of inert oxygen displacement extinguisher instead of an extinguisher that leave residues on equipment.

Do not use multipurpose Type ABC chemical fire extinguishers (dry chemical fire extinguishers) near Juniper Networks equipment. The primary ingredient in these fire extinguishers is monoammonium phosphate, which is very sticky and difficult to clean. In addition, in minute amounts of moisture, monoammonium phosphate can become highly corrosive and corrodes most metals.



NOTE: To keep warranties effective, do not use a dry chemical fire extinguisher to control a fire at or near a Juniper Networks router. If a dry chemical fire extinguisher is used, the unit is no longer eligible for coverage under a service agreement.

Any equipment in a room in which a chemical fire extinguisher has been discharged is subject to premature failure and unreliable operation. The equipment is considered to be irreparably damaged.

We recommend that you dispose of any irreparably damaged equipment in an environmentally responsible manner.

Power Guidelines, Requirements, and Specifications

All Services Routers are available with AC power. J2350, J4350, and J6350 routers are also available with DC power. For information about each router's power system, see “J2320 and J2350 Services Router Hardware Features” on page 13 and “J4350 and J6350 Services Router Hardware Features” on page 26.

For site wiring and power system guidelines, requirements, and specifications, see the following sections:

- Site Electrical Wiring Guidelines on page 110
- Router Power Requirements on page 111
- AC Power, Connection, and Power Cord Specifications on page 111
- DC Power, Connection, and Power Cable Specifications on page 113
- Planning for Power Management on page 114

Site Electrical Wiring Guidelines



WARNING: Certain ports on the router are designed for use as intrabuilding (within-the-building) interfaces only (Type 2 or Type 4 ports as described in GR-1089-CORE, Issue 4) and require isolation from the exposed outside plant (OSP) cabling. To comply with NEBS requirements and protect against lightening surges and commercial power disturbances, the intrabuilding ports *must not* be metallically connected to interfaces that connect to the OSP or its wiring. The intrabuilding ports on the router are suitable for connection to intrabuilding or unexposed wiring or cabling only. The addition of primary protectors is not sufficient protection for connecting these interfaces metallically to OSP wiring.



WARNING: DC-powered J2350, J4350, and J6350 Services Routers are intended for installation only in a restricted access location.

When planning the electrical wiring at your site, consider the factors discussed in the following sections.

Signaling Limitations

Improperly installed wires can emit radio interference. In addition, the potential for damage from lightning strikes increases if wires exceed recommended distances, or if wires pass between buildings. The electromagnetic pulse (EMP) caused by lightning can damage unshielded conductors and destroy electronic devices. If your site has previously experienced such problems, you might want to consult experts in electrical surge suppression and shielding.

Radio Frequency Interference

You can reduce or eliminate the emission of radio frequency interference (RFI) from your site wiring by using twisted-pair cable with a good distribution of grounding conductors. If you must exceed the recommended distances, use a high-quality twisted-pair cable with one ground conductor for each data signal when applicable.

Electromagnetic Compatibility

If your site is susceptible to problems with electromagnetic compatibility (EMC), particularly from lightning or radio transmitters, you might want to seek expert advice. Strong sources of electromagnetic interference (EMI) can destroy the signal drivers and receivers in the router and conduct power surges over the lines into the equipment, resulting in an electrical hazard. It is particularly important to provide a properly grounded and shielded environment and to use electrical surge-suppression devices.

CAUTION: To comply with intrabuilding lightning/surge requirements, intrabuilding wiring must be shielded, and the shield for the wiring must be grounded at both ends.

Router Power Requirements

Table 54 on page 111 and Table 55 on page 111 list the AC and DC power system electrical specifications for J-series Services Routers.

Table 54: AC and DC Power System Electrical Specifications for J2320 and J2350 Routers

Item	Specification
AC input voltage	100 to 240 VAC nominal
AC input line frequency	50 to 60 Hz
AC system current rating	J2320 Services Routers: 3.2 A to 1.3 A J2350 Services Routers: 3.5 A to 1.5 A
DC input voltage	–48 to –60 VDC operating range
DC system current rating	7.2 A

Table 55: AC and DC Power System Electrical Specifications for J4350 and J6350 Routers

Item	Specification
AC input voltage	100 to 240 VAC nominal
AC input line frequency	50 to 60 Hz
AC system current rating	J4350 Services Routers: 6 A J6350 Services Routers: 8 A
DC input voltage	–48 to –60 VDC operating range
DC system current rating	20 A

AC Power, Connection, and Power Cord Specifications

NOTE: The AC power cord for the Services Router is intended for use with the router only and not for any other use.

Detachable AC power cords, each 2.5 m (approximately 8 ft) long, are supplied with the Services Router. The appliance coupler at the female end of the cord inserts into the appliance inlet on the faceplate of the AC power supply. The coupler is type C19 as described by International Electrotechnical Commission (IEC) standard 60320. The plug at the male end of the power cord fits into the power source receptacle that is standard for your geographical location.

NOTE: In North America, AC power cords must not exceed 4.5 m (approximately 14.75 ft) in. length, to comply with National Electrical Code (NEC) Sections 400-8 (NFPA 75, 5-2.2) and 210-52, and Canadian Electrical Code (CEC) Section 4-010(3). The cords supplied with the router are in compliance.

Table 56 on page 112 lists AC power cord specifications provided for each country or region.

Table 56: AC Power Cord Specifications

Country	Electrical Specifications	Plug Standards
Australia	250 VAC, 10 A, 50 Hz	AS/NZ 3112–1993
China	250 VAC, 10 A, 50 Hz	GB2099.1 1996 and GB1002 1996 (CH1-10P)
Europe (except Italy and United Kingdom)	250 VAC, 10 A, 50 Hz	CEE (7) VII
Italy	250 VAC, 10 A, 50 Hz	CEI 23–16/VII
Japan	125 VAC, 12 A, 50 Hz or 60 Hz	JIS 8303
North America	125 VAC, 10 A, 60 Hz	NEMA 5-15
United Kingdom	250 VAC, 10 A, 50 Hz	BS 1363A

Figure 54 on page 112 illustrates the plug on the power cord for each country or region listed in Table 56 on page 112.

Figure 54: AC Plug Types

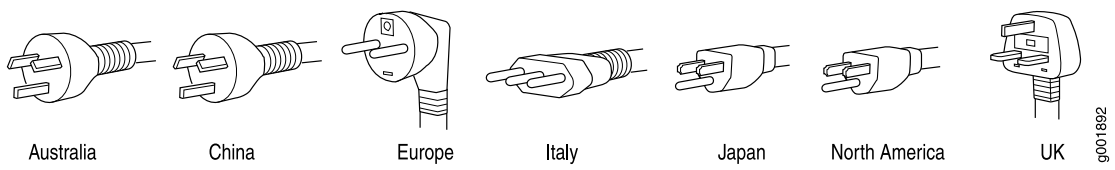

NOTE: Power cords and cables must not block access to router components or drape where people might trip on them.

For information about the AC power supply, see “J2320 and J2350 Services Router Hardware Features” on page 13 and “J4350 and J6350 Services Router Hardware Features” on page 26.

To connect the power cord during initial installation, see “Connecting Power” on page 126.

To replace the AC power cord, see “Replacing AC Power Supply Cords” on page 195 and “Replacing DC Power Supply Cables” on page 198.

DC Power, Connection, and Power Cable Specifications

Each DC power supply has a single DC input (–48 VDC and return) that requires a dedicated circuit breaker:

- J2350 routers—minimum 15 A (–48 VDC)
- J4350 and J6350 routers—minimum 25 A (–48 VDC)

If the J6350 router contains redundant DC power supplies, one power supply must be powered by a dedicated power feed derived from feed A, and the other power supply must be powered by a dedicated power feed derived from feed B. This configuration provides the commonly deployed A/B feed redundancy for the system.

Most sites distribute DC power through a main conduit that leads to frame-mounted DC power distribution panels, one of which might be located at the top of the rack that houses the router. A pair of cables (one input and one return) connects each set of terminal studs to the power distribution panel.

CAUTION: You must ensure that power connections maintain the proper polarity. The power source cables might be labeled (+) and (–) to indicate their polarity. There is no standard color coding for DC power cables. The color coding used by the external DC power source at your site determines the color coding for the leads on the power cables that attach to the terminal studs on each power supply.

WARNING: Power plant ground and chassis ground must be connected to the same building ground.

CAUTION: Before router installation begins, a licensed electrician must attach a cable lug to the grounding and power cables that you supply. A cable with an incorrectly attached lug can damage the router.

Each DC power cable (–48 VDC and return) must be 14 AWG single-strand wire cable, or as permitted by the local code. Each lug attached to the power cables must be a ring-type, vinyl-insulated TV14-6R lug, or equivalent.

NOTE: Power cords and cables must not block access to router components or drape where people might trip on them.

For information about the DC power supply, see "J2320 and J2350 Services Router Hardware Features" on page 13 and "J4350 and J6350 Services Router Hardware Features" on page 26.

To connect the DC power cable during initial installation, see "Connecting DC Power" on page 128.

To replace a DC power cable, see "Replacing DC Power Supply Cables" on page 198.

Planning for Power Management

Before you install a chassis or add a new PIM to an existing chassis, verify that the combination of PIMs to be installed does not exceed the power and heat capacities for that model. Add the low-power tokens, high-power tokens, and heat tokens required by each PIM, and compare them to the capacity of the chassis.

NOTE: The low power and high power correspond to a specific voltage for that PIM.

CAUTION: Do not install a combination of PIMs in a single chassis that exceeds the maximum power and heat capacity of the chassis. If J-series power management is enabled, PIMs that exceed the maximum power and heat capacity remain offline when the chassis is powered on.

To verify that the combination of PIMs to be installed in a chassis does not exceed the power and heat capacities for that model:

1. Check Table 57 on page 115 to determine the token values for low-power, high-power, and heat for each PIM that you plan to install in the chassis.
2. For all PIMs to be installed in the chassis:
   a. Add the low-power tokens for all PIMs to be installed in the chassis.
   b. Add the high-power tokens for all PIMs to be installed in the chassis.
   c. Add the heat dissipation tokens for all PIMs to be installed in the chassis.
3. Verify that the total number of low-power tokens, total number of high-power tokens, and the total number of heat dissipation tokens do not exceed the maximums permitted for your J-series chassis as specified in Table 58 on page 116.

Table 57 on page 115 shows the low-power consumption, high-power consumption, and heat dissipation, represented in non-dimensional tokens, assigned to each J-series PIM and TIM.

Table 57: J-series PIM Power Consumption and Heat Dissipation

Name	Model Number	PIM Abbreviation in JUNOS CLI	Tokens		
			Low Power	High Power	Heat
1-Port Gigabit Ethernet uPIM	JXU-SFP-S	1xSFP uPIM	8	–	8
6-Port Gigabit Ethernet uPIM	JXU-6GE-SFP-S	6xSFP uPIM	13	–	13
8-Port Gigabit Ethernet uPIM	JXU-8GE-TX-S	8xGE uPIM	21	–	27
16-Port Gigabit Ethernet uPIM	JXU-16GE-TX-S	16xGE uPIM	38	–	36
1-Port Copper Gigabit Ethernet ePIM	JXE-1GE-TX-S	1xGE Copper	6	–	7
1-Port SFP Gigabit Ethernet ePIM	JXE-1GE-SFP-S	1xGE SFP	4	–	4
Dual-Port Serial PIM	JX-2Serial-S	2xSerial	5	–	6
Dual-Port E1 PIM	JX-2E1-RJ48-S	2xE1	6	–	6
Dual-Port T1 PIM	JX-2T1-RJ48-S	2xT1	6	–	5
Dual-Port Channelized T1/E1/ISDN PRI PIM	JX-2CT1E1-RJ45-S	2xCT1E1 / PRI	5	–	5
E3 PIM (1 port)	JX-1E3-S	1xE3	7	–	7
T3 PIM (also known as DS3)	JX-1DS3-S	1xT3	7	–	7
Dual-Port Fast Ethernet PIM	JX-2FE-TX-S	2xFE	6	1	6
4-Port Fast Ethernet ePIM	JXE-4FE-TX-S	4xFE ePIM	9	–	9
4-Port ISDN BRI S/T PIM	JX-4BRI-S-S	4x BRI S/T	4	–	4
4-Port ISDN BRI U PIM	JX-4BRI-U-S	4x BRI U	4	–	6
ADSL 2/2 + Annex A PIM (1 port, for POTS)	JX-1ADSL-A-S	1x ADSL Annex A	16	2	16

Table 57: J-series PIM Power Consumption and Heat Dissipation *(continued)*

Name	Model Number	PIM Abbreviation in JUNOS CLI	Tokens		
			Low Power	High Power	Heat
ADSL 2/2 + Annex B PIM (1 port, for ISDN)	JX-1ADSL-B-S	1x ADSL Annex B	16	2	16
G.SHDSL PIM (2-port two-wire mode or 1-port four-wire mode)	JX-2SHDSL-S	2x SHDSL (ATM)	9	–	10
TGM550 Telephony Gateway Module	Avaya	1x TGM550	13	7	18
TIM508 Telephony Interface Module	Avaya	8x FXS TIM508	4	25	17
TIM510 E1/T1 Telephony Interface Module	Avaya	1x DS1 TIM510	6	–	6
TIM514 Analog Telephony Interface Module	Avaya	4x FXS, 4xFXO TIM514	4	13	12
TIM516 Analog Telephony Interface Module	Avaya	16x FXS TIM516	6	19	22
TIM518 Analog Telephony Interface Module	Avaya	8x FXS, 8xFXO TIM518	6	25	20
TIM521 BRI Telephony Interface Module	Avaya	4x BRI TIM521	3	–	3

Table 58 on page 116 lists the maximum power tokens and maximum heat tokens available for each model.

Table 58: Maximum Power and Heat Capacities of J-series Models

Model	Low- Power Capacity (tokens)	High- Power Capacity (tokens)	Heat Capacity (tokens)
J2320	50	50	50
J2350	83	83	83
J4350	100	100	100
J6350	100	100	100

Network Cable Specifications

The Services Router supports interfaces that use various kinds of network cable. For information about the type of cable used by each interface, see “Network Cable Specifications and Connector Pinouts” on page 227.

ISDN Provisioning

You might need a network termination type 1 (NT1) device to connect your ISDN interface to the ISDN service. Contact your service provider for details on the following information:

- External NT1 device and ISDN cable
- If the two items are required, where to obtain the items
- List of NT1 vendors

Site Preparation Checklist

The checklist in Table 59 on page 117 summarizes the tasks you need to perform when preparing a site for Services Router installation.

Table 59: Site Preparation Checklist

Item or Task	Performed By	Date	Notes
Verify that environmental factors such as temperature and humidity do not exceed router tolerances.			
Measure the distances between external power sources and the router installation site.			
Select the type of rack.			
Plan the rack location, including required space clearances.			
Secure the rack to the floor and the building structure.			
Acquire appropriate cables and connectors.			

Chapter 6

Installing and Connecting a Services Router

Make the appropriate preparations and verify the J-series equipment before installing a J-series Services Router and connecting it to a power source and the network.



CAUTION: Do not install a combination of PIMs in a single chassis that exceeds the maximum power and heat capacity of the chassis. If J-series power management is enabled, PIMs that exceed the maximum power and heat capacity remain offline when the chassis is powered on.

This chapter contains the following topics:

- Before You Begin on page 119
- Unpacking a J-series Services Router on page 120
- Installing J2320 and J2350 Routers on page 121
- Installing J4350 and J6350 Routers on page 122
- Connecting Interface Cables to Services Routers on page 125
- Chassis Grounding on page 125
- Connecting Power on page 126
- Powering a Services Router On and Off on page 131

Before You Begin

Before you begin installation, complete the following tasks:

- Read the information in "Maintenance and Operational Safety Guidelines and Warnings" on page 280, with particular attention to "Chassis Lifting Guidelines" on page 271.
- Determine where to install the Services Router, and verify that the rack or installation site meets the requirements described in "Preparing for Router Installation" on page 105.
- For installation, gather the following equipment and tools:

  - For J2320 and J2350 Routers—Number 2 Phillips screwdriver, and mounting screws appropriate for your rack.
  - For J4350 and J6350 Routers—Mounting brackets and screws (provided), number 2 Phillips screwdriver, and mounting screws appropriate for your rack.

- To connect the router to power and ground, have ready a grounding cable and lug, as specified in "Chassis Grounding" on page 125, and the power cords or cords shipped with the router. (You must supply your own power cables if you have a DC-powered router. See "DC Power, Connection, and Power Cable Specifications" on page 113.)



NOTE: The AC power cord for the Services Router is intended for use with the router only and not for any other use.

- To connect network interfaces, have ready a length of cable used by the interface, as specified in "Network Cable Specifications and Connector Pinouts" on page 227.
- If your router has ISDN ports, you might need an NT1 device to connect to the ISDN service. For details, see "ISDN Provisioning" on page 117.

Unpacking a J-series Services Router

The Services Router is shipped in a cardboard carton and secured with foam packing material. The carton also contains an accessory box and quick start instructions.



NOTE: The router is maximally protected inside the shipping carton. Do not unpack it until you are ready to begin installation.

To unpack the router:

1. Move the shipping carton to a staging area as close to the installation site as possible, but where you have enough room to remove the router.
2. Position the carton so that the arrows are pointing up.
3. Open the top flaps on the shipping carton.
4. Remove the accessory box, and verify the contents against the parts inventory on the label attached to the carton.
5. Pull out the packing material holding the router in place.
6. Verify the contents of the carton against the packing list included with the router.
7. Save the shipping carton and packing materials in case you later need to move or ship the router.

Installing J2320 and J2350 Routers

WARNING: DC-powered Services Routers are intended for installation only in a restricted access location.

You can center-mount or front-mount the J2320 and J2350 Services Routers in a rack. In general, a center-mount rack is preferable to a front-mount rack because the more even distribution of weight in the center-mount rack provides greater stability.

Many types of racks are acceptable, including four-post (telco) racks, enclosed cabinets, and open-frame racks. For more information about the type of rack or cabinet the J-series router can be installed into, see "Rack Requirements" on page 106.

WARNING: If you are installing multiple routers in one rack, install the lowest one first and proceed upward in the rack. Install heavier routers in the lower part of the rack. The router must be mounted at the bottom of the rack if it is the only unit in the rack.

WARNING: The J2320 and J2350 chassis weighs between 14.8 lb (6.7 kg) and 18.2 lb (8.3 kg). Read and follow the lifting guidelines in "Chassis Lifting Guidelines" on page 271.

To install the J2320 and J2350 router into a rack:

1. If necessary, reposition the mounting brackets. You can position the brackets in either the center or the front. Positioning the brackets in the center offers greater stability.

   J2320 and J2350 Services Routers come with mounting brackets installed on them (see Figure 55 on page 121).

Figure 55: Mounting Brackets on J2320 and J2350 Routers

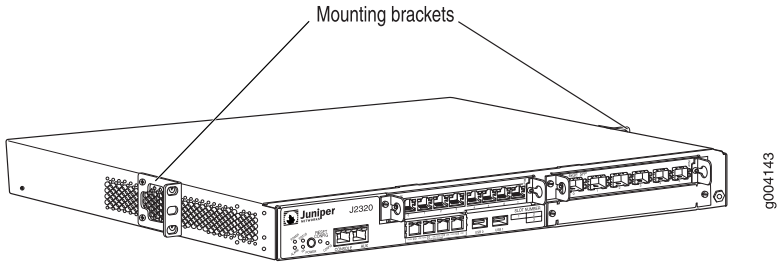

2. Have one person grasp the sides of the router, lift the router, and position it in the rack.

3. Align the top hole in each mounting bracket with a hole in each rack rail as shown in Figure 56 on page 122 and Figure 57 on page 122, making sure the chassis is level.

Figure 56: Hanging a J2320 Router in a Rack

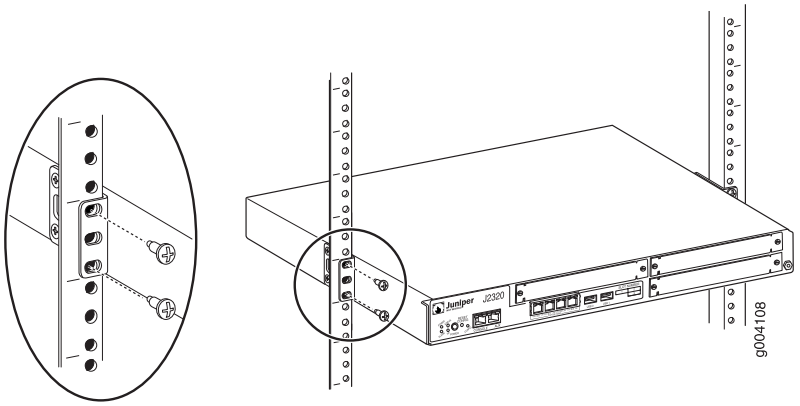

Figure 57: Hanging a J2350 Router in a Rack

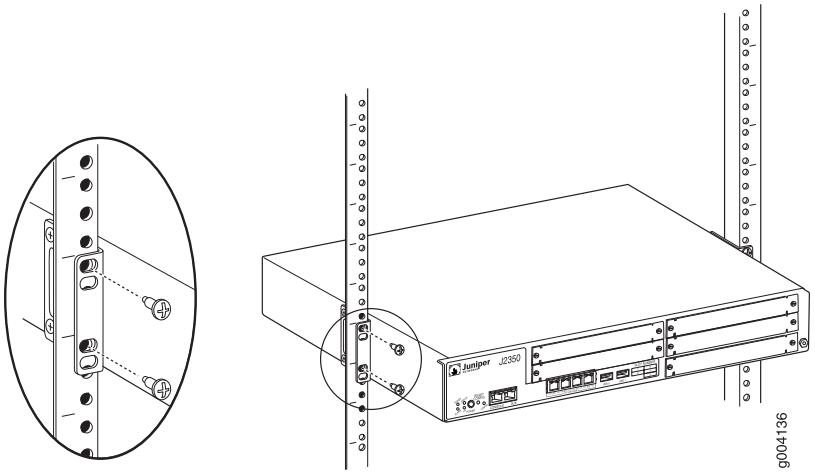

4. Have a second person install a mounting screw into each of the two aligned holes. With a number 2 Phillips screwdriver, tighten the screws.
5. Verify that the mounting screw on one side of the rack is aligned with the mounting screw on the opposite side and that the router is level.
6. Install the second screw in each mounting bracket.

Installing J4350 and J6350 Routers



WARNING: DC-powered Services Routers are intended for installation only in a restricted access location.

You can center-mount or front-mount the J4350 and J6350 Services Routers in a rack. In general, a center-mount rack is preferable to a front-mount rack because the more even distribution of weight in the center-mount rack provides greater stability.

Many types of racks are acceptable, including four-post (telco) racks, enclosed cabinets, and open-frame racks. For more information about the type of rack or cabinet the J-series router can be installed into, see "Rack Requirements" on page 106.

WARNING: If you are installing multiple routers in one rack, install the lowest one first and proceed upward in the rack. Install heavier routers in the lower part of the rack. The router must be mounted at the bottom of the rack if it is the only unit in the rack.

WARNING: The chassis weighs between 23 lb (10.4 kg) and 30.7 lb (13.9 kg). Read and follow the lifting guidelines in "Chassis Lifting Guidelines" on page 271.

To install the J4350 and J6350 router into a rack:

1. Attach the mounting brackets to the sides of the chassis (see Figure 58 on page 123). You can position the brackets either in the center or the front. Positioning the brackets in the center offers greater stability.

Figure 58: Installing the Mounting Brackets

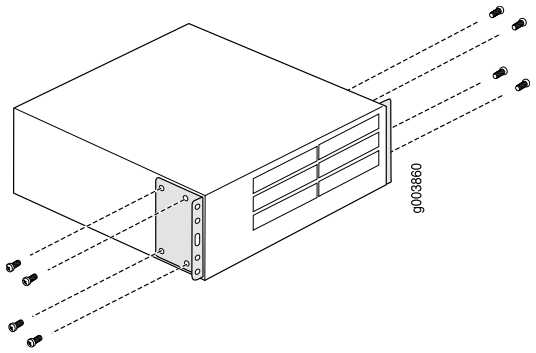

2. Attach a screw to each rack rail in the third hole down from where you want the top of the router to be positioned. Screw only part way in, leaving about ¼ in. (6 mm) distance between the screw head and the rail (see Figure 59 on page 124).

Figure 59: Attaching Center Screw to the Rack

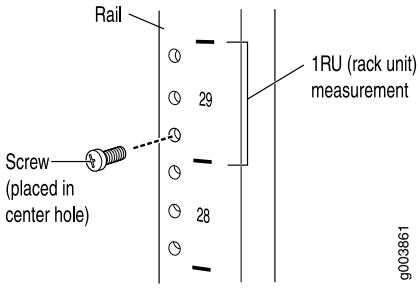

3. Lift the router and insert the larger elliptical openings in the mounting brackets onto the partially inserted screws so that the router is hanging from the two screws (see Figure 60 on page 124).

Figure 60: Hanging the Router in the Rack

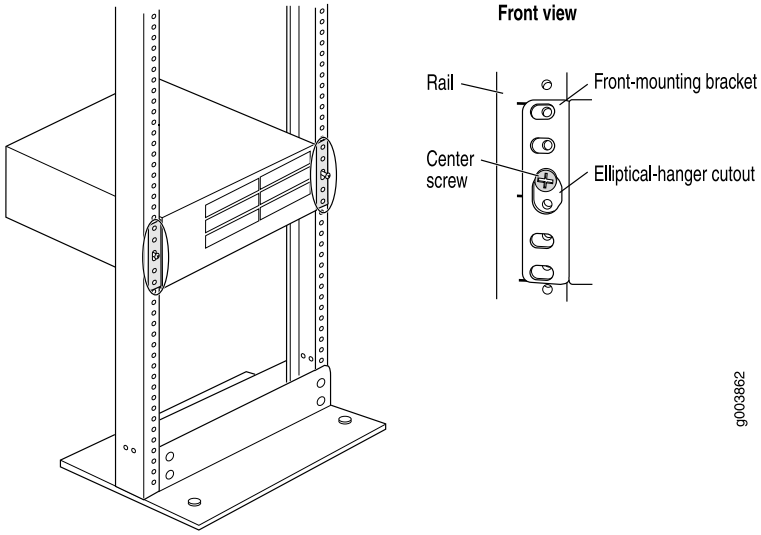

4. Verify that the mounting screws on one side of the rack are aligned with the mounting screws on the opposite side and that the router is level.

5. Install at least two mounting screws into each mounting bracket, in addition to the center screws from which the router hangs (see Figure 61 on page 125). Use a number 2 Phillips screwdriver to tighten the screws.

Figure 61: Completing the Installation

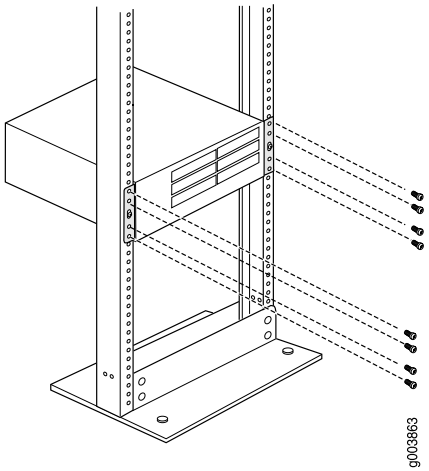

Connecting Interface Cables to Services Routers

You connect the interfaces installed in the Services Router to various network media. For more information about the network interfaces supported on the router, see the *J-series Services Router Basic LAN and WAN Access Configuration Guide*.

1. Have ready a length of the type of cable used by the interface, as specified in "Network Cable Specifications and Connector Pinouts" on page 227.
2. Insert the cable connector into the cable connector port on the interface faceplate.
3. Arrange the cable as follows to prevent it from dislodging or developing stress points:
   a. Secure the cable so that it is not supporting its own weight as it hangs to the floor.
   b. Place excess cable out of the way in a neatly coiled loop.
   c. Place fasteners on the loop to help maintain its shape.

Chassis Grounding

To meet safety and electromagnetic interference (EMI) requirements and to ensure proper operation, the Services Router must be adequately grounded before power is connected. In addition to the grounding pin on the AC power plug cord, a threaded insert (PEM nut), screw, and washer are provided on the rear of the chassis to connect the router to earth ground.



CAUTION: Before router installation begins, a licensed electrician must attach a cable lug to the grounding and power cables that you supply. A cable with an incorrectly attached lug can damage the router (for example, by causing a short circuit).

- For J2320 and J2350 Services Routers—The grounding cables must be, at minimum, 14 AWG single-strand wire cable. The grounding lug must be a ring-type, vinyl-insulated TV14-8R lug as shown in Figure 62 on page 127 and Figure 63 on page 128.
- For J4350 and J6350 Services Routers—The grounding cables must be, at minimum, 12 AWG single-strand wire cable. The grounding lug must be a two-hole lug as shown in Figure 64 on page 128.

To ground the router before connecting power, you connect the grounding cable to earth ground and then attach the lug on the cable to the chassis grounding point, with the screw. (See "Connecting Power" on page 126.)

Connecting Power

J2320, J2350 and J4350 Services Routers have a single fixed power supply. J6350 Services Routers have one or two field-replaceable power supplies. For more information about the J-series power specifications, see "Power Guidelines, Requirements, and Specifications" on page 109.



WARNING: DC-powered Services Routers are intended for installation only in a restricted access location.

Connecting AC Power

The router must be connected to earth ground during normal operation. The protective earthing terminal on the rear of the chassis is provided to connect the router to ground. Additional grounding is provided to an AC-powered router when you plug its power supply into a grounded AC power receptacle.

The AC power cord shipped with the router connects the router to earth ground when plugged into an AC grounding-type power outlet. The router must be connected to earth ground during normal operation.

For power cord requirements, see "AC Power, Connection, and Power Cord Specifications" on page 111.

To connect AC power to the router:

1. Attach an electrostatic discharge (ESD) grounding strap to your bare wrist, and connect the strap to the ESD point on the chassis. For more information about ESD, see "Preventing Electrostatic Discharge Damage" on page 255.
2. Use a grounding cable to connect the router to earth ground: (For cable requirements, see "Chassis Grounding" on page 125.)
   a. Verify that a licensed electrician has attached an appropriate grounding cable lug to the grounding cable.
   b. Connect one end of the grounding cable to a proper earth ground, such as the rack in which the router is installed.

c. With a Phillips screwdriver, remove the screw and washer from the PEM nuts at the grounding point on the rear of the chassis.

d. Place the grounding lug at the other end of the cable over the grounding point, as shown in Figure 62 on page 127 through Figure 64 on page 128.

e. Secure the cable lug to the grounding point, first with the washer, then with the screw. On J2320 and J2350 routers, use the screw containing a captive washer to secure the cable lug to the grounding point.

3. Locate the power cord or cords shipped with the router, which has a plug appropriate for your geographical location. For power cord specifications, see "Power Guidelines, Requirements, and Specifications" on page 109.

4. For the power supply:

   a. Insert the appliance coupler end of a power cord into the appliance inlet on the power supply faceplate, as shown in Figure 62 on page 127 through Figure 64 on page 128.

   b. Insert the plug into an AC power source receptacle.

5. Verify that the power cord does not block access to router components or drape where people can trip on it.

6. On J2320 and J2350 routers, use the power cable tie as follows to relieve strain on the cable (see Figure 62 on page 127 and Figure 63 on page 128):

   a. Wrap the loose end of the tie around the cable, and insert it into the opening on the tie.

   b. Pull the end to tighten the tie.

   To release the tie from the cable, press down the tab on the tie and loosen it.

Figure 62: Connecting AC Power to the J2320 Services Router

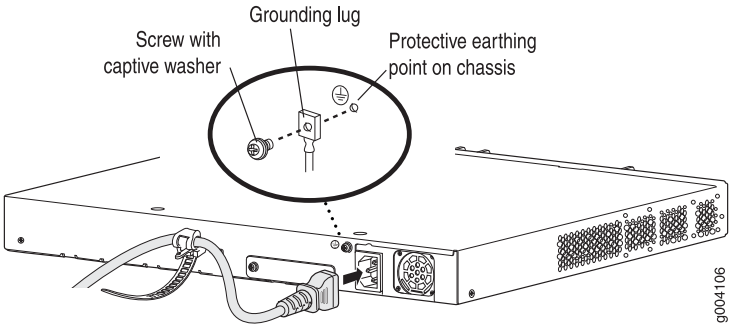

Figure 63: Connecting AC Power to the J2350 Services Router

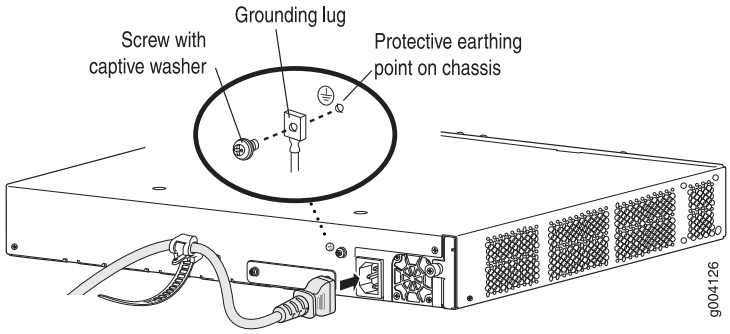

Figure 64: Connecting AC Power to the J4350 or J6350 Services Router

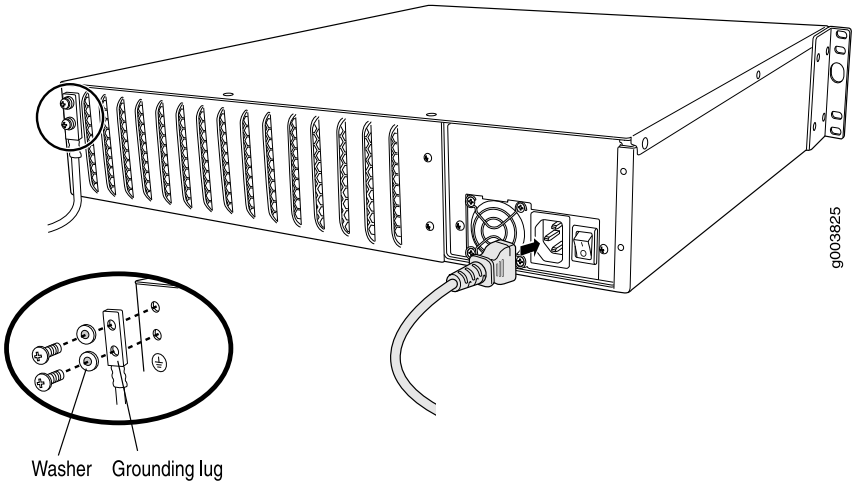

Connecting DC Power

CAUTION: If your J6350 Services Router includes an optional redundant DC power supply, connect each of the two power supplies to different input power sources. Failure to do so makes the router susceptible to total power failure if one of the power supplies fails.

The router must be connected to earth ground during normal operation. The protective earthing terminal on the rear of the chassis is provided to connect the router to ground.

For DC cable requirements, see “DC Power, Connection, and Power Cable Specifications” on page 113.

To connect DC power to the router:

1. Attach an electrostatic discharge (ESD) grounding strap to your bare wrist, and connect the strap to the ESD point on the chassis. For more information about ESD, see "Preventing Electrostatic Discharge Damage" on page 255.
2. Use a grounding cable to connect the router to earth ground: (For cable requirements, see "Chassis Grounding" on page 125.)
   a. Verify that a licensed electrician has attached an appropriate grounding cable lug to the grounding cable.
   b. Connect one end of the grounding cable to a proper earth ground, such as the rack in which the router is installed.
   c. With a Phillips screwdriver, remove the screw and washer from the PEM nut at the grounding point on the rear of the chassis.
   d. Place the grounding lug at the other end of the cable over the grounding point, as shown in Figure 65 on page 130 and Figure 66 on page 131.
   e. Secure the cable lug to the grounding point, first with the washer, then with the screw. On J2320 and J2350 routers, use the screw containing a captive washer to secure the cable lug to the grounding point.



NOTE: A DC power supply in a Services Router becomes grounded when you connect a grounding cable between the router and earth ground.

3. For each power supply:
   a. Ensure that the voltage across the DC power source cable leads is 0 V and that the cable leads cannot become active in any way during installation.



CAUTION: You must ensure that power connections maintain the proper polarity. The power source cables might be labeled (+) and (–) to indicate their polarity. There is no standard color coding for DC power cables. The color coding used by the external DC power source at your site determines the color coding for the leads on the power cables that attach to the terminal studs on each power supply.

   b. Verify that a licensed electrician has attached the appropriate power cable lugs to the negative and positive DC source power cables.
   c. Use a Phillips screwdriver to remove the clear plastic cover protecting the terminal block.
   d. Within the terminal block, remove the two center screws next to the labels –48 VDC and RTN.

      Each screw contains a captive washer to secure a DC source power cable lug to the terminal block.
   e. Using one of the removed screws, secure the positive (+) DC source power cable lug to the RTN terminal. Tighten the screw until snug. Do not

overtighten. Apply between 8 lb-in. (0.9 Nm) and 9 lb-in. (1.02 Nm) of torque to the screw.

f. Using the other removed screw, secure the negative (–) DC source power cable lug to the –48 VDC terminal. Tighten the screw until snug. Do not overtighten. Apply between 8 lb-in. (0.9 Nm) and 9 lb-in. (1.02 Nm) of torque to the screw.

g. Dress the power cables appropriately.

h. Replace the clear plastic cover over the terminal block.

4. Verify that the power cables do not block access to router components or drape where people can trip on them.

5. On J2320 and J2350 routers, use the power cable tie as follows to relieve strain on the cable (see Figure 65 on page 130):

   a. Wrap the loose end of the tie around the cable, and insert it into the opening on the tie.

   b. Pull the end to tighten the tie.

   To release the tie from the cable, press down the tab on the tie and loosen it.

Figure 65: Connecting DC Power to the J2350 Services Router

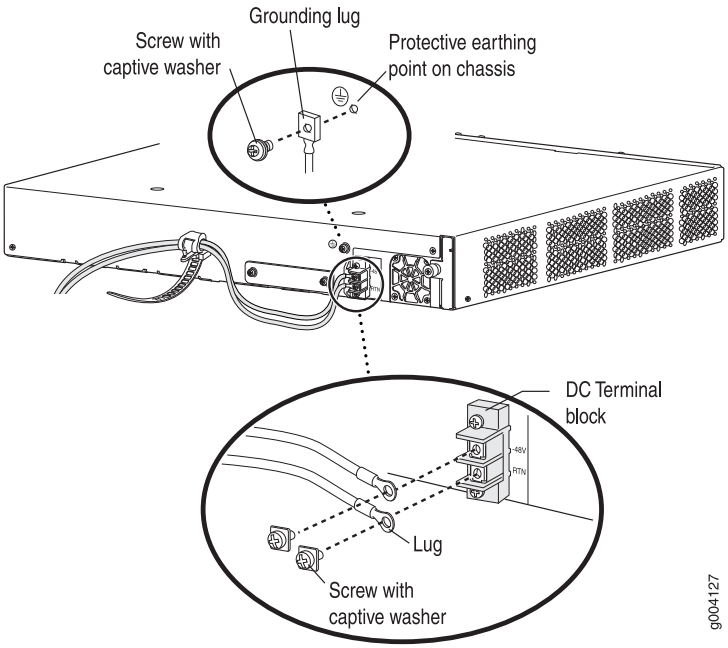

Figure 66: Connecting DC Power to the J4350 or J6350 Services Router

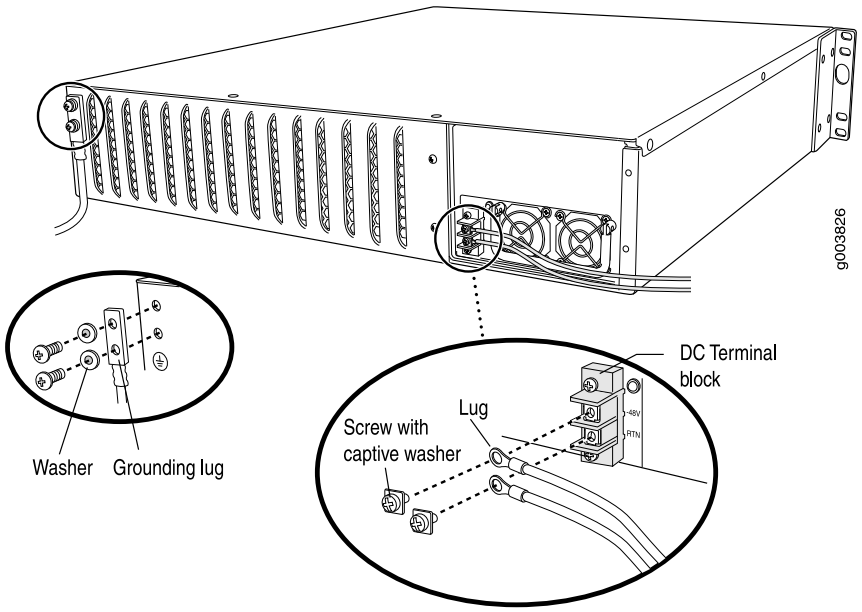

Powering a Services Router On and Off

To power on a Services Router, press the power button. The Routing Engine boots as the power supply completes its startup sequence. The POWER LED lights during startup and remains on steadily when the router is operating normally.

To power off a Services Router, you can shut it down in one of the following ways:

- Graceful shutdown—Press and release the power button. The router begins gracefully shutting down the operating system and then powers itself off.
- Immediate shutdown—Press the power button and hold it for more than 5 seconds. The router immediately powers itself off without shutting down the operating system.

To remove power completely from the router, unplug the AC power cord or switch off the DC power source. The power button on the Services Router is a standby power switch. If the router is connected to a power source when you press the power button to power the router off, the router remains in standby mode and a small amount (5 V and 3.3 V) of standby voltage is still available in the chassis.

Chapter 7

Establishing Basic Connectivity

The JUNOS software is preinstalled on the Services Router. When the router is powered on, it is ready to be configured. If the router does not have a configuration from the factory or your service provider, you must configure the software to establish basic connectivity.

If you are setting up a Services Router for the first time, you can use either J-Web Quick Configuration or a configuration editor to configure basic connectivity. For a brief explanation of J-Web Quick Configuration and the J-Web and CLI configuration editors, see "Services Router User Interface Overview" on page 83.

If you are setting up many Services Routers, autoinstallation can help automate the configuration process. For more information about autoinstallation, see the *J-series Services Router Administration Guide*.

This chapter contains the following topics. For more information about basic connectivity, see the *JUNOS System Basics Configuration Guide*.

- Basic Connectivity Terms on page 133
- Basic Connectivity Overview on page 134
- Before You Begin on page 138
- Connecting to a Services Router on page 139
- Configuring Basic Settings with J-Web Quick Configuration on page 145
- Configuring Basic Settings with a Configuration Editor on page 149
- Verifying Basic Connectivity on page 152

Basic Connectivity Terms

Before configuring basic connectivity, become familiar with the terms defined in Table 60 on page 133.

Table 60: Basic Connectivity Terms

Term	Definition
domain name	Name that identifies the network or subnetwork of a router.

Table 60: Basic Connectivity Terms *(continued)*

Term	Definition
Dynamic Host Configuration Protocol (DHCP)	Protocol for assigning dynamic IP addresses to devices on a network.
gateway	Packets destined for IP addresses not identified in the routing table are sent to the default gateway.
hostname	Unique name that identifies a router on the network.
loopback address	IP address of a Services Router on logical interface lo0.0 that is always active and available to external hosts and as the source address for outgoing packets.
Network Time Protocol (NTP)	Protocol that provides a reliable way of synchronizing the system time of a router.
root user	A superuser or system administrator who can perform any task in the file system.
secure shell (SSH)	Protocol that provides a secured method of logging in to a remote network system.
Telnet	Software that allows a computer to act as a remote terminal on a network system.

Basic Connectivity Overview

To connect your Services Router to the network and establish basic connectivity, you enter information about your network. This overview contains the following topics:

- Router Identification on page 134
- Root Password on page 135
- Time Zone and System Time on page 135
- Network Settings on page 136
- Default Gateway on page 136
- Backup Router on page 136
- Loopback Address on page 136
- Built-In Ethernet Interface Address on page 137
- Management Access on page 137

Router Identification

The domain name defines the network or subnetwork that the Services Router belongs to. The hostname refers to the specific machine, while the domain name is shared

among all the devices in a given network. Together the hostname and domain name identify the router in the network.

Root Password

The root user has complete privileges to configure the Services Router, and manage files in the router's file system. Initially, the root password is not defined on the router. To ensure basic security, you must define the root password during initial configuration. If a root password is not defined, you cannot commit configuration settings to take effect on the router.

If you use a plain-text password, the router displays the password as an encrypted string so that users viewing the configuration cannot easily see the password.

The root password must meet the following conditions:

- The password must be at least 6 characters long.
- You can include most character classes in a password (alphabetic, numeric, and special characters), except control characters.
- Valid passwords must contain at least one change of case or character class.

For Common Criteria environments only, the password must be between 10 and 20 characters long and must include at least three of the five character classes (uppercase letters, lowercase letters, punctuation marks, numbers, and other special characters). Control characters are not recommended. For more information, see the *Secure Configuration Guide for Common Criteria and JUNOS-FIPS*.

Time Zone and System Time

You define the time zone for the location where you plan to operate the Services Router by using a designation that consists of the following information for the location:

- Name of the continent or ocean—For example, America or Atlantic
- Name of the major city or other geographic feature in the time zone—For example, Detroit or Azores

A Network Time Protocol (NTP) server provides accurate time across a network. The router synchronizes the system time with the NTP server, and periodically accesses the NTP server to maintain the correct time.

The time zone and system time must be accurate so that the router schedules events and operations as expected.

For Common Criteria compliance, you must configure NTP to provide accurate timestamps for system log messages. For more information, see the *Secure Configuration Guide for Common Criteria and JUNOS-FIPS*.

Network Settings

A Domain Name System (DNS) server on the network maintains a database for resolving hostnames and IP addresses. Network devices can query the DNS server by hostnames rather than IP addresses. The router accesses the DNS servers that are added to the configuration to resolve hostnames in the order in which you list them.

If you plan to include your router in several domains, you can add these domains to the configuration so that they are included in a DNS search. When DNS searches are requested, the domain suffixes are appended to the hostnames.

Default Gateway

A default gateway is a static route that is used to direct packets addressed to networks not explicitly listed in the routing table. If a packet arrives at the Services Router with an address that the router does not have routing information for, the router sends the packet to the default gateway. The default gateway entry is always present in the routing and forwarding tables.

Backup Router

You can specify a backup router to take over when the routing protocol process of the Services Router is not running, usually when the Services Router is booting, or if its routing protocol process has failed. Packets arriving at a Services Router in this situation are routed to the backup router. When the routing protocol process starts up again, the address of the backup router is removed from the routing and forwarding tables of the Services Router. The backup router must be located on the same subnet.



NOTE: To configure a backup router, you must use the CLI or J-Web configuration editor. You cannot configure a backup router with J-Web Quick Configuration.

Loopback Address

The loopback address is the IP address of the Services Router. The loopback address ensures that the router provides an IP address to management applications. Because it must always be available to hosts attempting to route packets to the router, the loopback address resides on an interface that is always active, known as the loopback interface (lo0.0). Setting a loopback address ensures that the router can receive packets addressed to the loopback address as long as the router is reachable though any entry (ingress) interface. In addition, applications such as NTP, RADIUS, and TACACS+ can use the loopback address as the source address for outgoing packets.

If you use the J-Web Set Up Quick Configuration page, you can either set a loopback address of your choice or have the loopback address automatically set to 127.0.0.1 when you click **Apply** or **OK** to commit the configuration.

Built-In Ethernet Interface Address

The built-in Gigabit Ethernet interfaces, ge-0/0/0 through ge-0/0/3, on the front panel of the Services Router, are the interfaces through which you perform initial router setup. The examples in this guide use the ge-0/0/0 interface as the management interface, but you can use any built-in Ethernet port for management. After the initial configuration is complete, you can attach the built-in Ethernet port that you are using for management purposes to the management network.

Before initial configuration, when the factory default configuration is active, the router attempts to perform autoinstallation by obtaining a router configuration through all its connected interfaces, including ge-0/0/0. The Services Router acts as a DHCP client out the built-in Ethernet interfaces.

If the Services Router does not find a DHCP server within a few seconds, it sets the address of ge-0/0/0 to 192.168.1.1/24 and becomes a DHCP server out the ge-0/0/0 interface.



NOTE: If the ge-0/0/1 interface is being used, it is set to 192.168.2.1/24.

With the router temporarily acting as a DHCP server, you can manually configure it with the J-Web interface. Any DHCP client host, for example, a PC or laptop computer, directly connected to ge-0/0/0 receives an address on the 192.168.1.1/24 network.



NOTE: The DHCP functionality for initial setup is different from the configurable DHCP server functionality of the Services Router during operation. To configure the Services Router as a DHCP server, see the *J-series Services Router Administration Guide*.

Once you connect your laptop or PC to ge-0/0/0, you can use a Web browser to visit the address 192.168.1.1/24, access the J-Web Set Up Quick Configuration page, and complete the initial configuration of the router.

After you perform the initial configuration and commit it by clicking **Apply** or **OK** on the Set Up page, the configured router can no longer act as a DHCP server. Therefore, in order to continue using it as a management interface you should configure the IP address of the interface as part of the initial configuration.

Management Access

Telnet allows you to connect to the Services Router and access the CLI to execute commands from a remote system. Telnet connections are not encrypted and therefore can be intercepted.

Telnet access to the root user is prohibited. You must use more secure methods, such as SSH, to log in as root.

If you are using a JUNOScript server to configure and monitor routers, you can activate clear-text access on the router to allow unencrypted text to be sent directly over a

TCP connection without using any additional protocol (such as SSH, SSL, or Telnet). Information sent in clear text is not encrypted and therefore can be intercepted. For more information about the JUNOScript application programming interface (API), see the *JUNOScript API Guide*.

If the router is operating in a Common Criteria environment, see the *Secure Configuration Guide for Common Criteria and JUNOS-FIPS*.

SSH also allows you to connect to the router and access the CLI to execute commands from a remote system. However, unlike Telnet, SSH encrypts traffic so that it cannot be intercepted.

SSH can be configured so that connections are authenticated by a digital certificate. SSH uses public-private key technology for both connection and authentication. The SSH client software must be installed on the machine where the client application runs. If the SSH private key is encrypted (for greater security), the SSH client must be able to access the passphrase used to decrypt the key.

For information about obtaining SSH software, see http://www.ssh.com and http://www.openssh.com.

Before You Begin

Before you begin initial configuration, complete the following tasks:

- Install the Services Router in its permanent location, as described in "Installing and Connecting a Services Router" on page 119.
- Gather the following information:
  - Hostname for the router on the network
  - Domain that the router belongs to on the network
  - Password for the root user
  - Time zone where the router is located
  - IP address of an NTP server (if NTP is used to set the time on the router)
  - IP address of a DNS server
  - List of domains that can be appended to hostnames for DNS resolution
  - IP address of the default gateway
  - IP address to be used for the loopback interface
  - IP address of the built-in Ethernet interface that you will use for management purposes. The examples in this guide use the ge-0/0/0 interface.
- If you are performing the initial configuration with the J-Web interface, collect the following equipment:
  - A management device, such as a laptop, with an Ethernet port

- An Ethernet cable (provided)

- If you are performing the initial configuration with the CLI, collect the following equipment:
  - A management device, such as a PC or laptop, with a serial port and an asynchronous terminal application (such as Microsoft Windows Hyperterminal)
  - An RJ-45 to DB-9 serial port adapter (provided)
  - An Ethernet cable (provided)
  - For a remote connection, two dial-up modems
  - For a remote modem connection, a DB-9 female to DB-25 male adapter, or other adapter appropriate for your modem (not provided)

Connecting to a Services Router

You can connect to the Services Router using the J-Web or CLI interface.

This section contains the following topics:

- Connecting to the J-Web Interface on page 139
- Connecting to the CLI Locally on page 141
- Connecting to the CLI Remotely on page 143

Connecting to the J-Web Interface

If you plan to use the J-Web interface to configure the Services Router, you must connect through one of the built-in Ethernet management ports, as shown in Figure 67 on page 140 and Figure 68 on page 141.

When the Services Router is powered on for the first time, the system looks for a DHCP server, and if it does not find one, it assigns an IP address within the 192.168.1.0/24 subnetwork to any devices connected to it.

To connect to the J-Web interface through port 0 on the router (see Figure 67 on page 140 and Figure 68 on page 141):

1. On the management device, such as a PC or laptop, you use to access the J-Web interface, verify that the address of the port that you connect to the router is set to one of the following:
   - An Ethernet address on the 192.168.1/24 subnetwork other than 192.168.1.1
   - An Ethernet address from a DHCP server
2. Turn off the power to the management device.
3. Plug one end of the Ethernet cable into the Ethernet port on the management device.

4. Connect the other end of the Ethernet cable to the built-in Ethernet port on the router.
5. Power on the router by pressing the power button on the front panel.
6. Wait until the STATUS LED on the front panel turns solid green.
7. Turn on the power to the management device. The router assigns an IP address to the management device within the 192.168.1.0/24 subnetwork if the device is configured to use DHCP.
8. From the management device, open a Web browser and enter the IP address 192.168.1.1 in the address field. The Set Up Quick Configuration page appears.
9. Configure basic settings for your router as described in "Configuring Basic Settings with J-Web Quick Configuration" on page 145.

NOTE: You must manually configure the IP address for the management port you are using before you save your initial configuration. When you save the configuration for the first time, you will lose the connection to the router if you have not manually configured the IP address. If you lose connection through the management interface, you must connect through the console port.

Figure 67: Connecting to the Gigabit Ethernet Port on J2320 and J2350 Routers

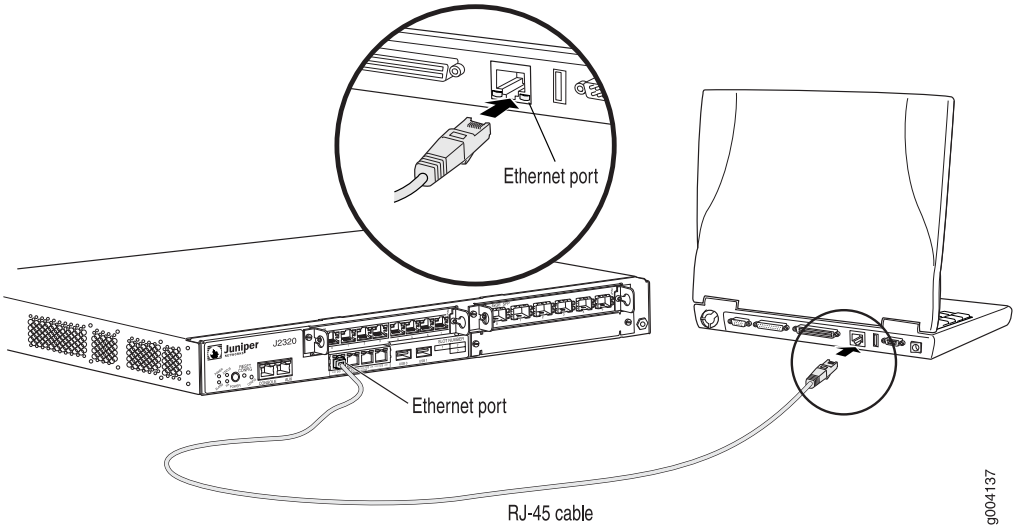

Figure 68: Connecting to the Gigabit Ethernet Port on J4350 and J6350 Routers

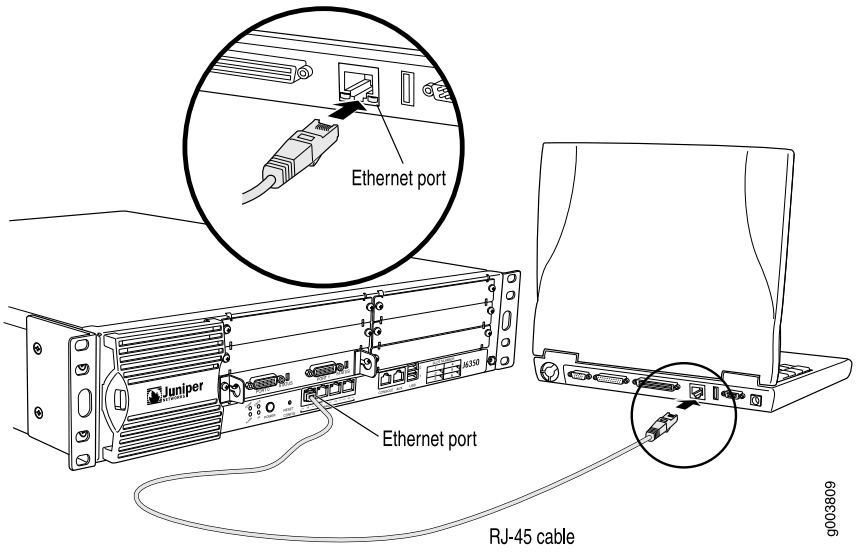

Connecting to the CLI Locally

If you plan to use the CLI to configure the router, you must connect through the console port, as shown in Figure 69 on page 142 and Figure 70 on page 143.

NOTE: Figure 69 on page 142 and Figure 70 on page 143 show a connection to a local management device. A remote connection to the router through a modem requires the cable and connector shown (provided in the router's accessory box), plus a DB-9 female to DB-25 male (or similar) adapter for your modem, which you must purchase separately.

To connect to the CLI using a local management device through the console port on the router:

1. Turn off power to the router.
2. Turn off the power to the management device, such as a PC or laptop computer, that you are using to access the CLI.
3. Plug one end of the Ethernet cable supplied with your router into the RJ-45 to DB-9 serial port adapter supplied with your router (see Figure 69 on page 142 and Figure 70 on page 143).
4. Plug the RJ-45 to DB-9 serial port adapter into the serial port on the management device (see Figure 69 on page 142 and Figure 70 on page 143).
5. Connect the other end of the Ethernet cable to the console port on the router (Figure 69 on page 142 and Figure 70 on page 143).
6. Turn on the power to the management device.
7. Start your asynchronous terminal emulation application (such as Microsoft Windows Hyperterminal) and select the appropriate COM port to use (for example, COM1).

8. Configure the port settings as follows:
   - Bits per second: 9600
   - Data bits: 8
   - Parity: None
   - Stop bits: 1
   - Flow control: None
9. Power on the router by pressing the power button on the front panel. Verify that the POWER LED on the front panel turns green.

   The terminal emulation screen on your management device displays the boot sequence. When the router has finished booting, a login prompt appears.
10. Log in as the user “root”. No password is required at initial connection, but you must assign a root password before committing any configuration settings.

Figure 69: Connecting to the Console Port on J2320 and J2350 Routers

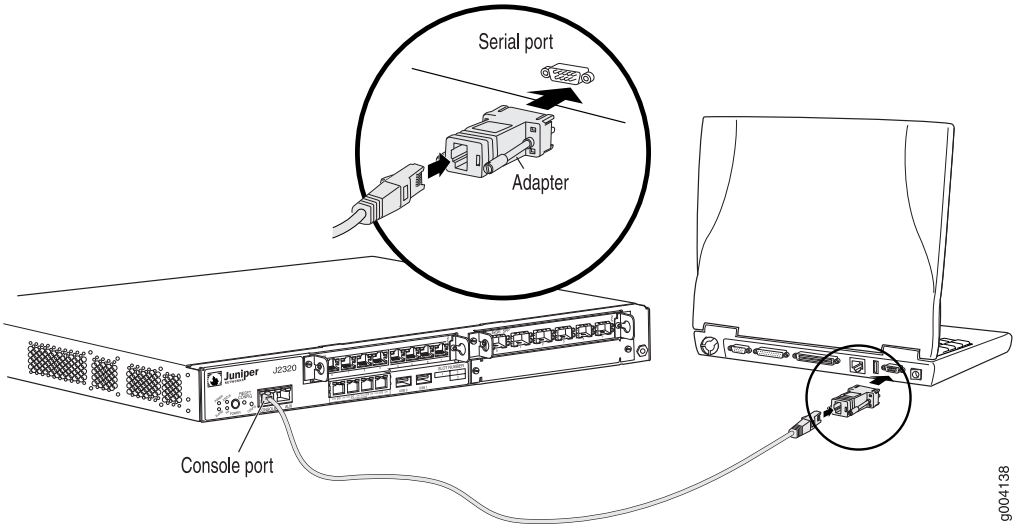

Figure 70: Connecting to the Console Port on J4350 and J6350 Routers

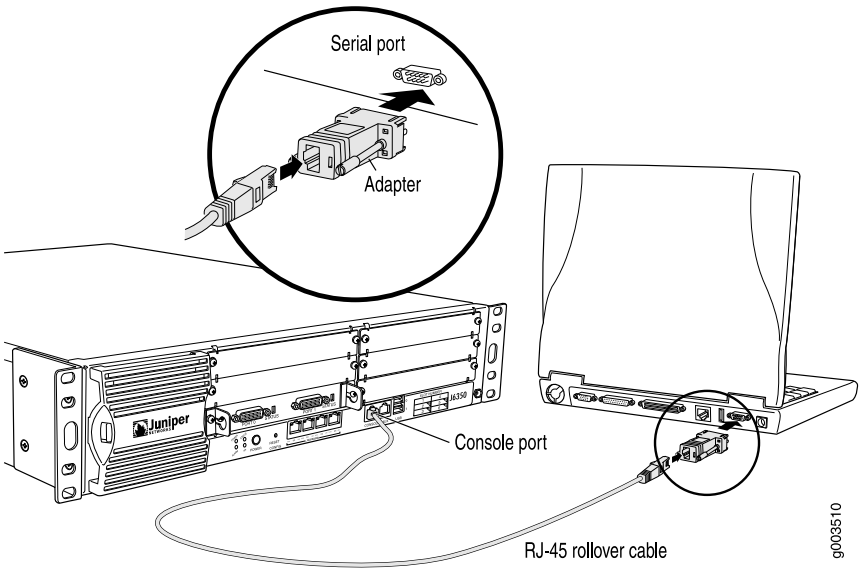

Connecting to the CLI Remotely

You can connect to the CLI from a remote location through two dial-up modems: a modem that is connected to the console port on the Services Router and a second modem connected to a remote management device. The modem connection allows you to remotely perform the same console operations you can perform locally.

This section contains the following topics:

- Configuring the Modem at the Router End on page 143
- Connecting the Modem to the Console Port on page 144
- Connecting to the CLI at the User End on page 145

Configuring the Modem at the Router End

NOTE: These instructions use Hayes-compatible modem commands to configure the modem. If your modem is not Hayes-compatible, refer to the documentation for your modem and enter equivalent modem commands.

Before you can connect a dial-up modem to the console port on the Services Router, you must configure the modem to accept a call on the first ring and accept Data Terminal Ready (DTR) signals. You must also disable flow control on the modem.

To configure the modem on the router end:

1. Connect the modem to a PC or laptop computer.
2. Power on the modem.

3. From the PC or laptop computer, start your asynchronous terminal emulation application (such as Microsoft Windows Hyperterminal) and select the COM port to which the modem is connected (for example, COM1).
4. Configure the port settings as follows:
   - Bits per second: 9600
   - Data bits: 8
   - Parity: None
   - Stop bits: 1
   - Flow control: None
5. In the HyperTerminal window, enter AT.

   An OK response verifies that the modem communicates successfully with the COM port on the PC or laptop.
6. To configure the modem to answer a call on the first ring, enter ATS0=1.
7. To configure the modem to accept modem control Data Terminal Ready (DTR) signals, enter AT&D1.
8. To disable flow control, enter AT&K0.
9. To save modem settings, enter AT&W.

Connecting the Modem to the Console Port



NOTE: Most modems have an RS-232 DB-25 connector. You must separately purchase an adapter to connect your modem to the RJ-45 to DB-9 adapter and Ethernet cable supplied with the router.

To connect the dial-up modem to the console port on the router:

1. Turn off power to the router.
2. Turn off the power to the modem.
3. Plug one end of the Ethernet cable supplied with your router into the console port on the router.
4. Plug the other end of the Ethernet cable into the RJ-45 to DB-9 serial port adapter supplied with your router.
5. Connect the serial port adapter to a separately purchased DB-9 female to DB-25 male adapter, or other adapter appropriate for your modem.
6. Plug the modem adapter into the DB-25 connector on the modem.
7. Connect the modem to your telephone network.
8. Turn on the power to the modem.
9. Power on the router by pressing the power button on the front panel. Verify that the POWER LED on the front panel turns green.

Connecting to the CLI at the User End

To remotely connect to the CLI through a dial-up modem connected to the console port on the router:

1. At your remote location, connect a modem to a management device such as a PC or laptop computer.
2. On the PC or laptop computer, start your asynchronous terminal emulation application (such as Microsoft Windows Hyperterminal).
3. Select the COM port to which the modem is connected (for example, COM1).
4. Configure the port settings as follows:
   - Bits per second: 9600
   - Data bits: 8
   - Parity: None
   - Stop bits: 1
   - Flow control: None
5. In the HyperTerminal window, enter AT.

   An OK response verifies that the modem communicates successfully with the COM port on the PC or laptop.
6. To dial the modem that is connected to the console port on the router, enter ATDT *remote-modem-number*. For example, if the number of the modem connected to the console port on the router is 0013033033030, enter ATDT 0013033033030.

   The router login prompt appears.
7. Log in as the user root. No password is required at initial connection, but you must assign a root password before committing any configuration settings.

Configuring Basic Settings with J-Web Quick Configuration

J-Web Quick Configuration allows you to configure basic settings. Figure 71 on page 146 shows the Quick Configuration page for basic setup.

Figure 71: Set Up Quick Configuration Page

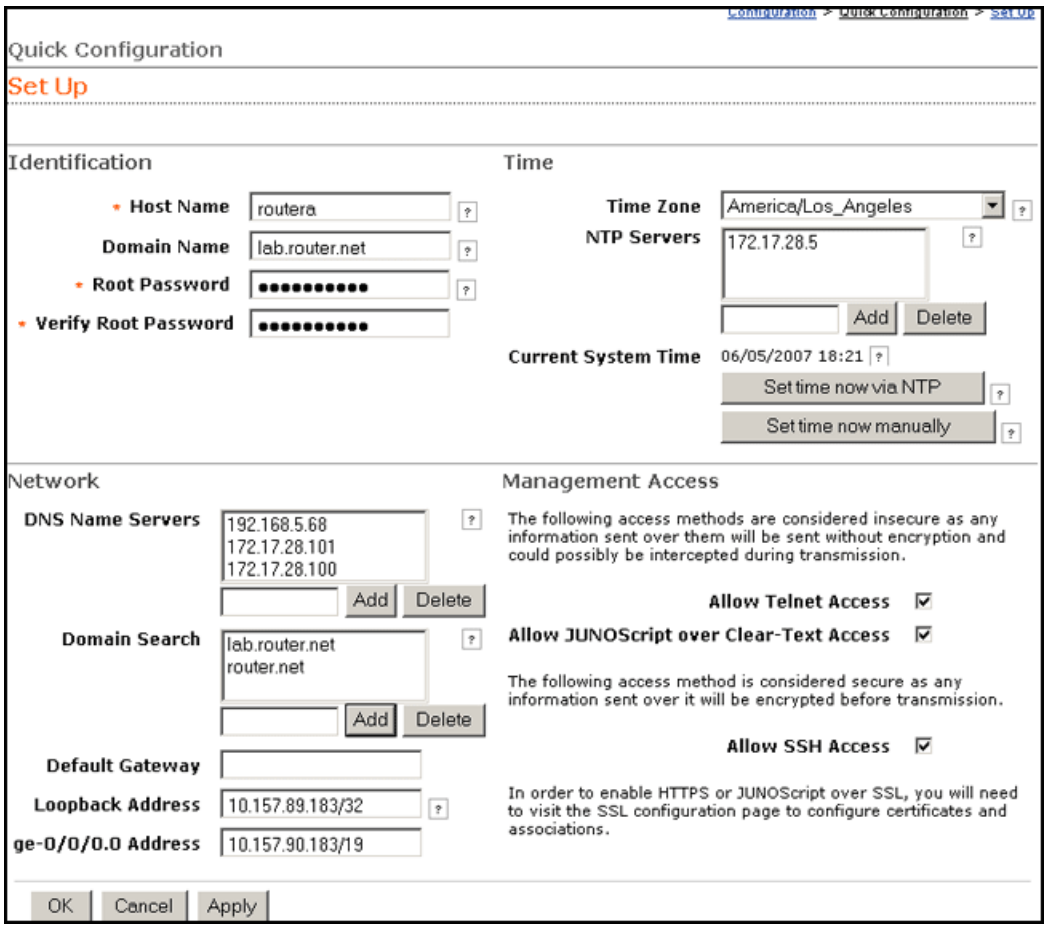

Before you configure the router, gather the information described in “Before You Begin” on page 138.

To configure basic settings with J-Web Quick Configuration:

1. If you have not already done so, connect a management device to the ge-0/0/0 interface on port 0/0. For instructions, see “Connecting to the J-Web Interface” on page 139.
2. If the Set Up Quick Configuration page is not displayed, select **Configuration > Quick Configuration > Set Up**.
3. Enter information into the Set Up Quick Configuration page, as described in Table 61 on page 147.
4. Click one of the following buttons:
   - To apply the configuration and stay in the Set Up Quick Configuration page, click **Apply**.
   - To apply the configuration and return to the Quick Configuration page, click **OK**.

- To cancel your entries and return to the Quick Configuration page, click **Cancel**.



NOTE: After initial configuration is complete, the Services Router stops functioning as a DHCP server. If you change the IP address of ge-0/0/0 and have the management device configured to use DHCP, you lose your DHCP lease and your connection to the router through the J-Web interface. To reestablish a connection, either set the IP address on the management device manually, or connect ge-0/0/0 to the management network and access the router another way—for example, through the console port.

5. To check the configuration, see Displaying Basic Connectivity Configurations on page 152.

Table 61: Set Up Quick Configuration Summary

Field	Function	Your Action
Identification		
Host Name (required)	Defines the hostname of the router.	Type the hostname.
Domain Name	Defines the network or subnetwork that the machine belongs to.	Type the domain name.
Root Password (required)	Sets the root password that user "root" can use to log in to the router.	Type a plain-text password that the system encrypts. **NOTE:** After a root password has been defined, it is required when you log in to the J-Web user interface or the CLI.
Verify Root Password (required)	Verifies the root password has been typed correctly.	Retype the password.
Time		
Time Zone	Identifies the time zone that the router is located in.	From the list, select the appropriate time zone.
NTP Servers	Specify an NTP server that the router can reach to synchronize the system time.	To add an IP address, type it in the box to the left of the Add button, then click **Add**. To delete an IP address, click on it in the box above the Add button, then click **Delete**.

Table 61: Set Up Quick Configuration Summary *(continued)*

Field	Function	Your Action
Current System Time	Synchronizes the system time with the NTP server, or manually set the system time and date.	■ To immediately set the time using the NTP server, click **Set Time via NTP**. The router sends a request to the NTP server and synchronizes the system time. **NOTE:** If you are configuring other settings on this page, the router also synchronizes the system time using the NTP server when you click **Apply** or **OK**. ■ To set the time manually, click **Set Time Manually**. A pop-up window allows you to select the current date and time from lists.
Network		
DNS Name Servers	Specify a DNS server that the router can use to resolve hostnames into addresses.	To add an IP address, type it in the box to the left of the Add button, then click **Add**. To delete an IP address, click on it in the box above the Add button, then click **Delete**.
Domain Search	Adds each domain name that the router is included in to the configuration so that they are included in a DNS search.	To add a domain name, type it in the box to the left of the Add button, then click **Add**. To delete a domain name, click on it in the box above the Add button, then click **Delete**.
Default Gateway	Defines a default gateway through which to direct packets addressed to networks not explicitly listed in the routing table.	Type a 32-bit IP address, in dotted decimal notation.
Loopback Address	Defines a reserved IP address that is always available on the router. If no address is entered, this address is set to 127.0.0.1/32.	Type a 32-bit IP address and prefix length, in dotted decimal notation.
ge-0/0/0 Address	Defines the IP address and prefix length of ge-0/0/0. The interface ge-0/0/0 is typically used as the management interface for accessing the router. The DHCP client sets this address to 192.168.1.1/24 if no DHCP server is found.	Type a 32-bit IP address and prefix length, in dotted decimal notation. **NOTE:** You must enter the ge-0/0/0 address on the Quick Configuration Set Up page before you click **Apply** or **OK**. If you do not manually configure this address, you will lose your connection to the J-Web interface when you click **Apply** or **OK**.
Management Access		
Allow Telnet Access	Allows remote access to the router using Telnet.	To enable Telnet access, select the check box.
Allow JUNOScript over Clear-Text Access	Allows JUNOScript to access the router using a protocol for sending unencrypted text over a TCP connection.	To enable JUNOScript access over clear text, select the check box.
Allow SSH Access	Allows remote access to the router using SSH.	To enable SSH access, select the check box.

Configuring Basic Settings with a Configuration Editor

To establish basic connectivity on a Services Router, you identify the router, connect the router to the network, and specify basic network settings.

In a typical network, the Services Router has the basic settings listed in Table 62 on page 149. Determine the values to set on the Services Router in your network.

Table 62: Sample Settings on a Services Router

Services Router Property	Sample Value
Services Router hostname	routera
Access for user "root"	SSH RSA public key
IP address of the NTP server used to synchronize system time on the Services Router	10.148.2.21
Services Router location	Sunnyvale, California, USA, which is in the America/Los_Angeles time zone
IP address of the DNS server to which DNS requests are sent	10.148.2.32
Domains to which the Services Router belongs	lab.router.net and router.net
IP address of a backup router to use while the Services Router is booting or if the routing protocol processes fail to start	192.168.2.12/24
Loopback IP address and prefix length for the Services Router lo0 interface	172.16.1.24/32
IP address and prefix length for the Services Router ge-0/0/0 interface	192.168.1.1/24

You can configure basic settings in the J-Web interface from a device attached to the ge-0/0/0 interface on port 0. For instructions, see "Connecting to the J-Web Interface" on page 139. You can also connect to the CLI to configure basic settings. For instructions, see "Connecting to the CLI Locally" on page 141 and "Connecting to the CLI Remotely" on page 143.

To use a configuration editor to configure basic settings:

1. Navigate to the top of the configuration hierarchy in either the J-Web or CLI configuration editor.
2. To configure basic settings, perform the configuration tasks described in Table 63 on page 150.

3. If you are using the J-Web interface, click **Commit** to view a summary of your changes, then click **OK** to commit the configuration. If you are using the CLI, commit the configuration by entering the commit command.
4. To check the configuration, see Displaying Basic Connectivity Configurations on page 152.

Table 63: Configuring Basic Settings

Task	J-Web Configuration Editor	CLI Configuration Editor
Navigate to the **System** level in the configuration hierarchy.	1. In the J-Web interface, select **Configuration > View and Edit > Edit Configuration**. 2. Next to System, click **Configure** or **Edit**.	From the [edit] hierarchy level, enter edit system
Define the hostname of the router.	In the Host name box, type the hostname of the router—for example, routera.	Set the hostname. For example: set host-name routera
Name the domain in which the router is located.	In the Domain name box, type the domain name of the router—for example, lab.router.net.	Set the domain name. For example: set domain-name lab.router.net
Allow SSH remote access.	1. In the Nested configuration section, next to Services, click **Configure** or **Edit**. 2. Next to Ssh, click **Configure** or **Edit**. 3. Click **OK**. 4. Click **OK** a second time to return to the System level in the configuration editor hierarchy.	Set remote access for SSH: set services ssh
Define root authentication for access to the router. **NOTE:** For readability, the entire key is not shown.	1. In the Nested configuration section, next to Root authentication, click **Configure** or **Edit**. 2. Next to Ssh rsa, click **Add New Entry**. 3. In the Authorized key box, type the RSA password—for example, ssh-rsa AAAAB3Nza...D9Y2gXF9ac== root@routera.lab.router.net 4. Click **OK**. 5. Click **OK** a second time to return to the System level in the configuration editor hierarchy.	Set the root password. For example: set root-authentication ssh-rsa "ssh-rsa AAAAB3Nza...D9Y2gXF9ac== root@routera.lab.router.net"
Define the time zone the router is located in.	In the Time zone list, select the time zone for your router—for example, **America/Los_Angeles**.	Set the time zone. For example: set time-zone America/Los_Angeles

Table 63: Configuring Basic Settings *(continued)*

Task	J-Web Configuration Editor	CLI Configuration Editor
Define the NTP server that NTP requests can be sent to.	1. In the Nested configuration section, next to Ntp, click **Configure** or **Edit**. 2. Next to Server, click **Add New Entry**. 3. In the Address box, type the NTP server's IP address—for example, 10.148.2.21 4. Click **OK**. 5. Click **OK** a second time to return to the System level in the configuration editor hierarchy.	Set the address of the NTP server. For example: set ntp server 10.148.2.21
Define the DNS server that receives DNS requests.	1. Next to Name server, click **Add New Entry**. 2. In the Address box, type the address of the DNS server—for example, 10.148.2.32. 3. Click **OK**.	Set the address of the DNS server. For example: set name-server 10.148.2.32
Add each domain that the router belongs to.	1. Next to Domain search, click **Add New Entry**. 2. In the Value box, type the name of the domain in which the router is located—for example, lab.router.net. 3. Click **OK**. 4. Next to Domain search, click **Add New Entry**. 5. In the Value box, type the name of another domain that the router belongs to—for example, router.net. 6. Click **OK**.	Set the domains to be searched. For example: set domain-search lab.router.net set domain-search router.net
Define the backup router to be used when the router is booting or the routing protocol processes are not running.	In the Backup router section, next to Address, type the IP address of the backup router—for example, 192.168.2.44.	Set the address for the backup router. For example: set backup router address 192.168.2.44
Define the IP address for lo0.0.	1. In the configuration editor hierarchy, next to Interfaces, click **Configure** or **Edit**. 2. In the Interface table, locate the lo0 row and click **Unit**. 3. In the Unit table, click **0**, and in the Family section next to Inet, click **Configure** or **Edit**. 4. To delete the existing IP address, click the **Discard** button. Select the **Delete Configuration Below This Point** option button from the next display. 5. Next to Address, click **Add new entry**. 6. In the Source box, type the address and prefix length for the loopback interface—for example, 172.16.1.24/32. 7. Click **OK**.	1. From the [edit] hierarchy level, enter edit interfaces 2. Delete the existing IP address: delete lo0 unit 0 family inet address 3. Set the IP address and prefix length of lo0.0. For example: set lo0 unit 0 family inet address 172.16.1.24/32

Table 63: Configuring Basic Settings *(continued)*

Task	J-Web Configuration Editor	CLI Configuration Editor
Define the IP address for ge-0/0/0.	1. In the configuration editor hierarchy, next to Interfaces, click **Configure** or **Edit**. 2. In the Interface table, locate the ge-0/0/0 row and click **Unit**. 3. In the Unit table, click **0**, and in the Family section next to Inet, click **Configure** or **Edit**. 4. To delete the existing IP address, click the **Discard** button. Select the **Delete Configuration Below This Point** option button from the next display. 5. Next to Address, click **Add new entry**. 6. In the Source box, type the address and prefix length for the management interface—for example, 192.168.1.1/24. 7. Click **OK**.	1. Delete the existing IP address: delete ge-0/0/0 unit 0 family inet address. 2. Set the IP address and prefix length of ge-0/0/0. For example: set ge-0/0/0 unit 0 family inet address 192.168.1.1/24

Verifying Basic Connectivity

To verify that the Services Router has the settings you configured, perform the following task:

- Displaying Basic Connectivity Configurations on page 152

Displaying Basic Connectivity Configurations

Purpose Verify the configuration of basic connectivity. Because the basic connectivity settings appear in different places in the configuration hierarchy, displaying the entire configuration at once makes viewing the settings easier.

Action From the J-Web interface, select **Configuration > View and Edit > View Configuration Text**. Alternatively, from configuration mode in the CLI, enter the show command. The following sample output displays the sample values configured in Table 63 on page 150. Your output displays the values you set.

```
[edit]
user@host# show
system {
    host-name routera;
    domain-name lab.router.net;
    domain-search [ lab.router.net router.net ];
    backup-router 192.168.2.44;
    time-zone America/Los_Angeles;
    root-authentication {
        ssh-rsa "ssh-rsa AAAAB3Nza...D9Y2gXF9ac==root@routera.lab.router.net";
    }
    name-server {
```

```
        10.148.2.32;
    }
    services {
    }
    ntp {
        server 10.148.2.21;
    }
}
interfaces {
    ge-0/0/0 {
        unit 0 {
            family inet {
                address 192.168.1.1/24;
            }
        }
    }
    lo0 {
        unit 0 {
            family inet {
                address 172.16.1.24/32;
            }
        }
    }
}
```

What It Means The output shows the configuration of basic connectivity. Verify that the values displayed are correct for your Services Router.

Related Topics For more information about the format of a configuration file, see the *J-series Services Router Basic LAN and WAN Access Configuration Guide*.

Chapter 8

Configuring Secure Web Access

You can manage a Services Router remotely through the J-Web interface. To communicate with the router, the J-Web interface uses Hypertext Transfer Protocol (HTTP). HTTP allows easy Web access but no encryption. The data that is transmitted between the Web browser and the router by means of HTTP is vulnerable to interception and attack. To enable secure Web access, a router supports Hypertext Transfer Protocol over Secure Sockets Layer (HTTPS). You can enable HTTP or HTTPS access on specific interfaces and ports as needed.

You can use J-Web Quick Configuration, the J-Web configuration editor, or the CLI configuration editor to configure secure Web access.

This chapter contains the following topics. For more information about the J-Web interface, see the *J-Web Interface User Guide*.

- Secure Web Access Terms on page 155
- Secure Web Access Overview on page 156
- Before You Begin on page 156
- Configuring Secure Web Access on page 157
- Configuring Secure Web Access with a Configuration Editor on page 160
- Verifying Secure Web Access on page 161

Secure Web Access Terms

Before configuring secure Web access, become familiar with the terms defined in Table 64 on page 155.

Table 64: Secure Web Access Terms

Term	Definition
certificate authority (CA)	Third-party organization or company that issues digital certificates used to create digital signatures and public-private key pairs. The CA guarantees the identity of the individual or device that presents the digital certificate.
Hypertext Transfer Protocol (HTTP)	Protocol used to publish and receive information on the Web, such as text and graphics files.

Table 64: Secure Web Access Terms *(continued)*

Term	Definition
Hypertext Transfer Protocol over Secure Sockets Layer (HTTPS)	Protocol similar to HTTP with an added encryption layer that encrypts and decrypts user page requests and pages that are returned by a Web server. HTTPS is used for secure communication, such as payment transactions.
Privacy-Enhanced Mail (PEM)	Technique for securely exchanging electronic mail over a public medium. PEM is based upon public key infrastructure (PKI) standards like X.509 certificates. SSL certificates are partly based on PEM and end in the suffix **.pem**.
RSA	Public key cipher that can be used for encrypting messages and making digital signatures. RSA uses a well-known encryption and authentication algorithm that is a part of popular Web browsers.
Secure Sockets Layer (SSL)	Protocol that encrypts security information before transmitting data across a network. SSL requires two keys to encrypt data—a public key known to everyone and a private or secret key known only to the recipient of the message—and an authentication certificate. Most popular Web browsers support SSL.
SSL certificate	Secure electronic identifier conforming to the X.509 standard, definitively identifying an individual, system, company, or organization. In addition to identification data, the digital certificate contains a serial number, a copy of the certificate holder's public key, the identity and digital signature of the issuing certificate authority (CA), and an expiration date.

Secure Web Access Overview

A Services Router uses the Secure Sockets Layer (SSL) protocol to provide secure management of Services Routers through the Web interface. SSL uses public-private key technology that requires a paired private key and an authentication certificate for providing the SSL service. SSL encrypts communication between your router and the Web browser with a session key negotiated by the SSL server certificate.

An SSL certificate includes identifying information such as a public key and a signature made by a certificate authority (CA). When you access the router through HTTPS, an SSL handshake authenticates the server and the client and begins a secure session. If the information does not match or the certificate has expired, you are not able to access the router through HTTPS.

Without SSL encryption, communication between your router and the browser is sent in the open and can be intercepted. We recommend that you enable HTTPS access on your WAN interfaces.

On J-series Services Routers, HTTP access is enabled by default on the built-in management interfaces. By default, HTTPS access is supported on any interface with an SSL server certificate.

Before You Begin

Before you begin initial configuration, complete the following tasks:

- Establish basic connectivity. See "Establishing Basic Connectivity" on page 133.

- Obtain an SSL certificate from a trusted signing authority. See “Generating SSL Certificates” on page 157.

Generating SSL Certificates

To enable secure Web access, you must first generate a digital SSL certificate, and then enable HTTPS access on the Services Router.

To generate an SSL certificate:

1. Enter the following **openssl** command in your Secure Shell command-line interface. The **openssl** command generates a self-signed SSL certificate in the privacy-enhanced mail (PEM) format. It writes the certificate and an unencrypted 1024-bit RSA private key to the specified file.

   % openssl req –x509 –nodes –newkey rsa:1024 –keyout *filename*.pem -out *filename*.pem

   Replace *filename* with the name of a file in which you want the SSL certificate to be written—for example, **new.pem**.

2. When prompted, type the appropriate information in the identification form. For example, type **US** for the country name.

3. Display the contents of the file **new.pem**.

   cat new.pem

   Copy the contents of this file for installing the SSL certificate.

You can use either J-Web Quick Configuration or a configuration editor to install the SSL certificate and enable HTTPS.

Configuring Secure Web Access

Navigate to the Secure Access Quick Configuration page by selecting **Configuration > Quick Configuration > Secure Access**. On this page, you can enable HTTP and HTTPS access on interfaces for managing Services Routers through the Web interface. You can also install SSL certificates and enable JUNOScript over SSL with the Secure Access page.

Figure 72 on page 158 shows the Secure Access Quick Configuration page.

Figure 72: Quick Configuration Secure Access Page

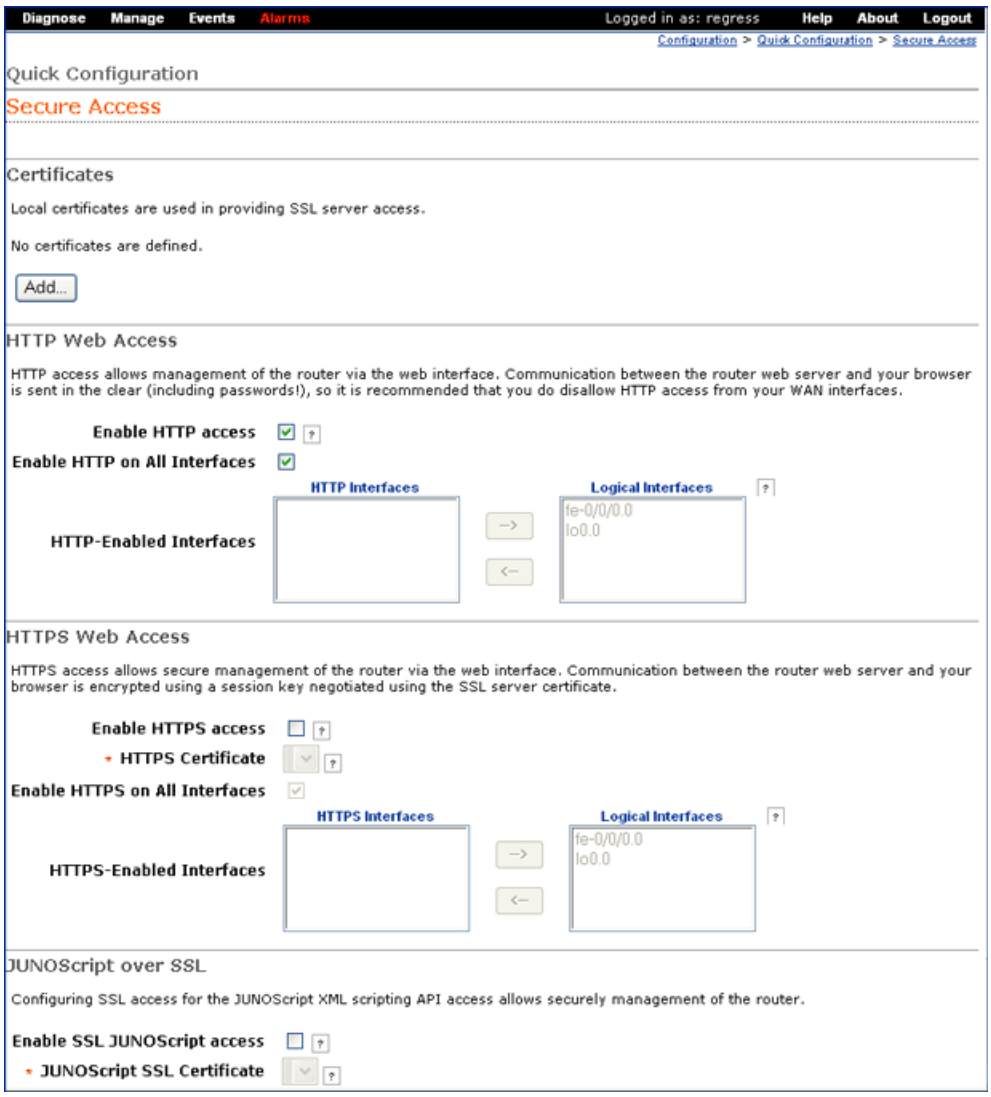

To configure Web access settings in the J-Web interface:

1. Enter information into the Secure Access Quick Configuration page, as described in Table 65 on page 159.
2. Click one of the following buttons:
   - To apply the configuration and stay on the Quick Configuration page, click **Apply**.
   - To apply the configuration and return to the Quick Configuration page, click **OK**.
   - To cancel your entries and return to the Quick Configuration page, click **Cancel**.

3. To verify that Web access is enabled correctly, connect to the router using one of the following methods:
   - For HTTP access—In your Web browser, type http://*URL* or http://*IP address*.
   - For HTTPS access—In your Web browser, type https://*URL* or https://*IP address*.
   - For SSL JUNOScript access—A JUNOScript client such as JUNOScope is required. For information about how to log in to JUNOScope, see the *JUNOScope Software User Guide*.
4. To verify the secure Web access configuration, see "Verifying Secure Web Access" on page 161.

Table 65: Secure Access Quick Configuration Summary

Field	Function	Your Action
Certificates		
Certificates	Displays digital certificates required for SSL access to the Services Router. Allows you to add and delete SSL certificates. For information about how to generate an SSL certificate, see "Generating SSL Certificates" on page 157.	To add a certificate: 1. Click **Add**. Opens the Add a Local Certificate page. 2. Type a name in the Certificate Name box—for example, new. 3. Paste the generated certificate and RSA private key in the Certificate box. To delete a certificate, select it and click **Delete**.
HTTP Web Access		
Enable HTTP Access	Enables HTTP access on interfaces.	To enable HTTP access, select the **Enable HTTP access** check box.
Enable HTTP on All Interfaces	Enables HTTP access on all interfaces at one time.	To enable HTTP access on all interfaces, select the **Enable HTTP on All Interfaces** check box.
HTTP-Enabled Interfaces	Specifies interfaces on which you want to enable HTTP access.	Select and deselect interfaces by clicking the direction arrows: ■ To enable HTTP access on an interface, add the interface to the HTTP Interfaces list. ■ To disable HTTP access on an interface, add the interface to the Logical Interfaces list.
HTTPS Web Access		
Enable HTTPS Access	Enables HTTPS access on interfaces.	To enable HTTPS access, select the **Enable HTTPS access** check box.
HTTPS Certificate	Specifies SSL certificates to be used for encryption. This field is available only after you have created an SSL certificate.	To specify the HTTPS certificate, select a certificate from the HTTPS Certificate list—for example, **new**.

Table 65: Secure Access Quick Configuration Summary *(continued)*

Field	Function	Your Action
Enable HTTPS on All Interfaces	Enables HTTPS on all interfaces at one time.	To enable HTTPS on all interfaces, select the **Enable HTTPS on All Interfaces** check box.
HTTPS-Enabled Interfaces	Allows you to specify interfaces on which you want to enable HTTPS access.	Select and deselect interfaces by clicking the direction arrows: ■ To enable HTTPS access on an interface, add the interface to the HTTPS Interfaces list. ■ To disable HTTPS access on an interface, add the interface to the Logical Interfaces list.
JUNOScript over SSL		
Enable SSL JUNOScript access	Enables secured SSL access to the JUNOScript XML scripting API.	To enable SSL access, select the **Enable SSL JUNOScript access** check box.
JUNOScript SSL Certificate	Specifies SSL certificates to be used for encryption. This field is available only after you create at least one SSL certificate.	To enable an SSL certificate, select a certificate from the JUNOScript SSL Certificate list—for example, **new**.

Configuring Secure Web Access with a Configuration Editor

You can manage your Services Router using a secure Web connection by enabling HTTPS.

To enable HTTPS on your Services Router:

1. Navigate to the top of the configuration hierarchy in either the J-Web or CLI configuration editor.
2. Perform the configuration tasks described in Table 66 on page 160.
3. If you are finished configuring the router, commit the configuration.
4. To check the configuration, see "Verifying Secure Web Access" on page 161.

Table 66: Configuring a Secure Web Access

Task	J-Web Configuration Editor	CLI Configuration Editor
Navigate to the **Security** level in the configuration hierarchy.	1. In the J-Web interface, select **Configuration > View and Edit > Edit Configuration**. 2. Next to Security, click **Configure** or **Edit**.	From the [edit] hierarchy level, enter edit security

Table 66: Configuring a Secure Web Access *(continued)*

Task	J-Web Configuration Editor	CLI Configuration Editor
Import the SSL certificate that you have generated—for example, new. For information about generating SSL certificates, see "Generating SSL Certificates" on page 157.	1. Next to Certificates, click **Configure**. 2. Next to Local, click **Add new entry**. 3. In the Name box, type a name for the certificate to be imported—for example, new. 4. In the Certificate box, paste the generated SSL certificate and private key. 5. Click **OK**.	Enter set certificates local new load-key-file*path* Replace *path* with a path or URL to the file containing an SSL certificate and private key in PEM format—for example, /var/tmp/new.pem
Enable HTTPS access and specify the SSL certificate to be used for authentication. Specify the port on which HTTPS access is to be enabled—for example, TCP port 8443. **NOTE:** You can enable HTTPS access on specified interfaces also. If you enable HTTPS without specifying an interface, HTTPS is enabled on all interfaces.	1. On the main Configuration page next to System, click **Configure** or **Edit**. 2. Select the **Services** check box and click **Edit** next to it. 3. Next to Web management, click **Edit**. 4. Select the **Https** check box and click **Edit** next to it. 5. In the Local certificate box, type the name of the certificate—for example, new. 6. In the Port box, type 8443. 7. Click **OK**.	From the [edit system] hierarchy level, enter set services web-management https local-certificate new port 8443

Verifying Secure Web Access

To verify that the Services Router has the secure access settings you configured, perform the following tasks:

- Displaying an SSL Certificate Configuration on page 161
- Displaying a Secure Access Configuration on page 162

Displaying an SSL Certificate Configuration

Purpose Display the SSL certificate configuration.

Action From the J-Web interface, select **Configuration > View and Edit > View Configuration Text**. Alternatively, from configuration mode in the CLI, enter the show security command.

The following sample output displays an SSL certificate generated with instructions in "Generating SSL Certificates" on page 157.

```
[edit]
user@R0# show security
```

```
certificates {
   local {
      new {
         "-----BEGIN RSA PRIVATE KEY-----\nMIICXQIBAAKBgQC/C5UI4frNqbi
            qPwbTiOkJvqoDw2YgYse0Z5zzVJyErgSg954T\nEuHM67Ck8hAOrCnb0YO+SY
            Y5rCXLf4+2s8k9EypLtYRw/Ts66DZoXI4viqE7HSsK\n5sQw/UDBIw7/MJ+OpA
            ... KYiFf4CbBBbjIMQJ0HFudW6ISVBsIONkzX+FT\ni95ddka6iIRnArEb4VFCRh+
            e1QBdp1UjziYf7NuzDx4Z\n -----END RSA PRIVATE KEY-----\n-----BEGIN
            CERTIFICATE----- \nMIIDjDCCAvWgAwIBAgIBADANBgkqhkiG9w0BAQQ ...
            FADCBkTELMAkGA1UEBhMCdXMx\nCzAJBgNVBAgTAmNhMRIwEAYDVQQHEwlzdW5ue
            HB1YnMxDTALBgNVBAMTBGpucHIxJDAiBgkqhkiG\n9w0BCQEWFW5iaGFyZ2F2YUB
            fLUYAnBYmsYWOH\n -----END CERTIFICATE-----\n"; ## SECRET-DATA
      }
   }
}
```

What It Means The output shows the intended secure access configuration.

Related Topics For more information about the format of a configuration file, see the *J-series Services Router Basic LAN and WAN Access Configuration Guide*.

Displaying a Secure Access Configuration

Purpose Verify the secure access configuration.

Action From the J-Web interface, select **Configuration > View and Edit > View Configuration Text**. Alternatively, from configuration mode in the CLI, enter the show system services command.

The following sample output displays the sample values for secure Web access as configured in Table 66 on page 160.

```
[edit]
user@R0# show system services
web-management {
   http;
   https {
      port 8443;
      local-certificate new;
   }
}
```

What It Means The output shows the intended secure access configuration.

Related Topics For more information about the format of a configuration file, see the *J-series Services Router Basic LAN and WAN Access Configuration Guide*.

Chapter 9

Installing and Managing J-series Licenses

To enable some JUNOS software features on a J-series Services Router, you must purchase, install, and manage separate software licenses. The presence on the router of the appropriate software license keys (passwords) determines the features you can configure and use.

For information about how to purchase J-series software licenses, contact your Juniper Networks sales representative.

This chapter contains the following topics:

- J-series License Overview on page 163
- Before You Begin on page 164
- Managing J-series Licenses with the J-Web Interface on page 165
- Managing J-series Licenses with the CLI on page 167
- Verifying J-series License Management on page 169

J-series License Overview

Each J-series feature license is valid for only a single Services Router. To manage the licenses, you must understand the components of a license key.

This section contains the following topics:

- Software Feature Licenses on page 163
- License Key Components on page 164

Software Feature Licenses

Each feature license is tied to exactly one software feature, and that license is valid for exactly one Services Router. Table 67 on page 163 lists the Services Router software features that require licenses.

Table 67: J-series Services Router Software Feature Licenses

Licensed Software Feature	License Name
IBM Networking	

Table 67: J-series Services Router Software Feature Licenses *(continued)*

Licensed Software Feature	License Name
Data link switching (DLSw) on all J-series Services Routers	J-series Services Router Software License for Data Link Switching (DLSw) Support
Traffic Analysis	
J-Flow traffic analysis—all configuration statements within the [edit forwarding-options sampling] and [edit forwarding-options accounting] hierarchies.	J-series Services Router Software License for J-Flow Traffic Analysis
BGP Route Reflectors	
Advanced Border Gateway Protocol (BGP) features that enable route reflectors—all configuration statements within the [edit protocols bgp cluster] hierarchy. BGP clusters allow routers to act as route reflectors by enabling the readvertising of BGP routes to internal peers.	J-series Services Router Software License for Advanced Border Router Protocol Support

License Key Components

A license key consists of two parts:

- License ID—Alphanumeric string that uniquely identifies the license key. When a license is generated, it is given a license ID.
- License data—Block of binary data that defines and stores all license key objects.

For example, in the following typical license key, the string li29183743 is the license ID, and the trailing block of data is the license data:

```
li29183743 4ky27y acasck 82fsj6 jzsn4q ix8i8d adj7kr
                   8uq38t ix8i8d jzsn4q ix8i8d 4ky27y acasck
                   82fsj6 ii8i7e adj7kr 8uq38t ks2923 a9382e
```

The license data defines the device ID for which the license is valid and the version of the license.

Before You Begin

Before you begin managing the J-series licenses, complete the following tasks:

- Purchase the licenses you require.
- Establish basic connectivity. See “Establishing Basic Connectivity” on page 133.

Managing J-series Licenses with the J-Web Interface

To manage licenses with the J-Web interface, you perform the following tasks:

- Adding New Licenses with the J-Web Interface on page 166
- Deleting Licenses with the J-Web Interface on page 167
- Displaying License Keys with the J-Web Interface on page 167
- Downloading Licenses with the J-Web Interface on page 167

Figure 73 on page 165 shows the J-Web Licenses page.

Figure 73: Licenses Page

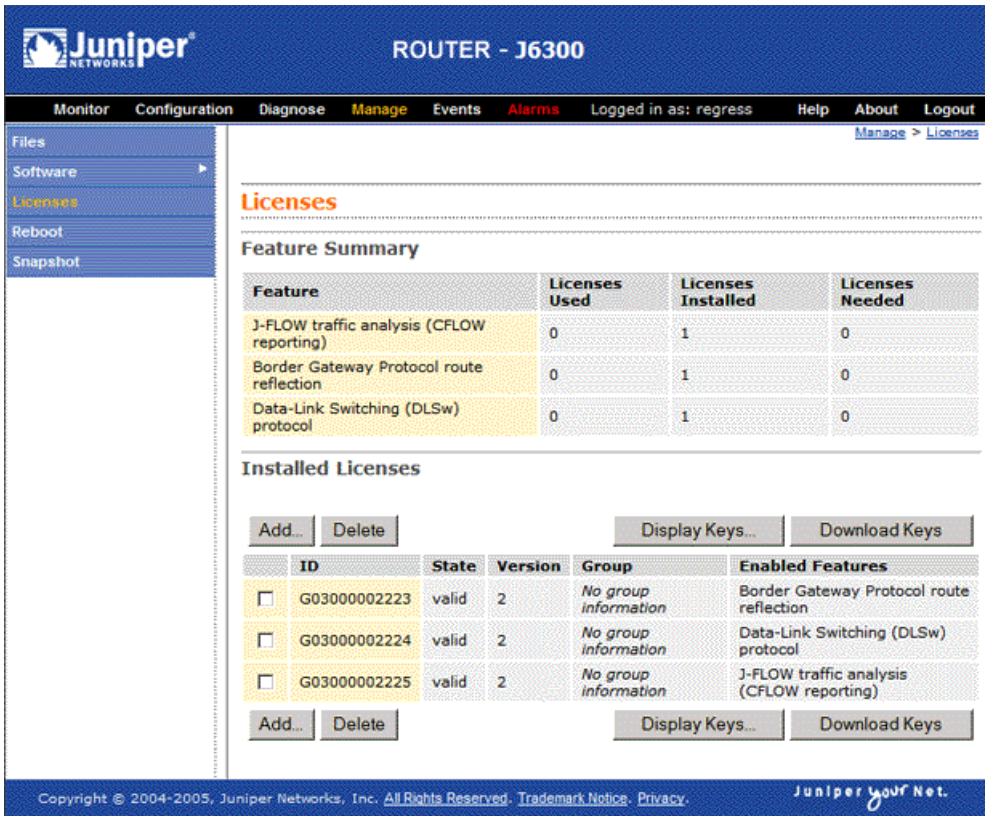

The Licenses page displays a summary of licensed features that are configured on the Services Router and a list of the licenses that are installed on the router. The information on the license management page is summarized in Table 68 on page 165.

Table 68: Summary of License Management Fields

Field Name	Definition
Feature Summary	

Table 68: Summary of License Management Fields *(continued)*

Field Name	Definition
Feature	Name of the licensed feature: ■ J-series licenses listed in Table 67 on page 163. ■ All features—All-inclusive licenses
Licenses Used	Number of licenses currently being used on the router. Usage is determined by the configuration on the router. If a feature license exists and that feature is configured, the license is considered used.
Licenses Installed	Number of licenses installed on the router for the particular feature.
Licenses Needed	Number of licenses required for legal of use the feature. Usage is determined by the configuration on the router: If a feature is configured and the license for that feature is not installed, a single license is needed.
Installed Licenses	
ID	Unique alphanumeric ID of the license.
State	Valid—The installed license key is valid. Invalid—The installed license key is not valid.
Version	Numeric version number of the license key.
Group	If the license defines a group license, this field displays the group definition. If the license requires a group license, this field displays the required group definition. **NOTE:** Because group licenses are currently unsupported, this field is always blank.
Enabled Features	Name of the feature that is enabled with the particular license.

Adding New Licenses with the J-Web Interface

To add a new license key on a Services Router with the J-Web license manager:

1. In the J-Web interface, select **Manage > Licenses**.
2. Under Installed Licenses, click **Add** to add a new license key.
3. Do *one* of the following, using a blank line to separate multiple license keys:
   - In the License File URL box, type the full URL to the destination file containing the license key to be added.
   - In the License Key Text box, paste the license key text, in plain-text format, for the license to be added.
4. Click **OK** to add the license key.
5. Go on to "Verifying J-series License Management" on page 169.

Deleting Licenses with the J-Web Interface

To delete one or more license keys from a Services Router with the J-Web license manager:

1. In the J-Web interface, select **Manage > Licenses**.
2. Select the check box of the license or licenses you want to delete.
3. Click **Delete**.
4. Go on to "Verifying J-series License Management" on page 169.

Displaying License Keys with the J-Web Interface

To display the license keys installed on a Services Router with the J-Web license manager:

1. In the J-Web interface, select **Manage > Licenses**.
2. Under Installed Licenses, click **Display Keys** to display all the license keys installed on the router.

   A screen displaying the license keys in text format appears. Multiple licenses are separated by a blank line.
3. Go on to "Verifying J-series License Management" on page 169.

Downloading Licenses with the J-Web Interface

To download the license keys installed on the Services Router with the J-Web license manager:

1. In the J-Web interface, select **Manage > Licenses**.
2. Under Installed Licenses, click **Download Keys** to download all the license keys installed on the router to a single file.
3. Select **Save it to disk** and specify the file to which the license keys are to be written.
4. Go on to "Verifying J-series License Management" on page 169.

Managing J-series Licenses with the CLI

To manage the J-series licenses with the CLI, perform the following tasks.

- Adding New Licenses with the CLI on page 167
- Deleting a License with the CLI on page 168
- Saving License Keys with the CLI on page 168

Adding New Licenses with the CLI

To add a new license key to the Services Router with the CLI:

1. Enter operational mode in the CLI.
2. Enter one of the following CLI commands:
   - To add a license key from a file or URL, enter the following command, specifying the filename or the URL where the key is located:

     request system license add *filename* | *url*

   - To add a license key from the terminal, enter the following command:

     request system license add terminal

3. When prompted, enter the license key, separating multiple license keys with a blank line.

   If the license key you enter is invalid, an error is generated when you press Ctrl-D to exit license entry mode.
4. Go on to "Verifying J-series License Management" on page 169.

Deleting a License with the CLI

To delete a license key from the Services Router with the CLI:

1. Enter operational mode in the CLI.
2. Enter the following command for each license, specifying the license ID. You can delete only one license at a time.

   request system license delete *license-id*

3. Go on to "Verifying J-series License Management" on page 169.

Saving License Keys with the CLI

To save the licenses installed on the Services Router to a file with the CLI:

1. Enter operational mode in the CLI.
2. To save the installed license keys to a file or URL, enter the following command:

   request system license save *filename* | *url*

   For example, the following command saves the installed license keys to a file named license.config:

   request system license save ftp://user@host/license.conf

3. Go on to "Verifying J-series License Management" on page 169.

Verifying J-series License Management

To verify J-series license management, perform these tasks:

- Displaying Installed Licenses on page 169
- Displaying License Usage on page 170
- Displaying Installed License Keys on page 170

Displaying Installed Licenses

Purpose Verify that the expected licenses are installed and active on the Services Router.

Action From the CLI, enter the show system license command.

```
user@router> show system license
License usage:
                   Licenses     Licenses    Licenses
  Feature name          used    installed      needed
  j-flow                   0            1           0
  bgp-reflection           0            1           0
  dlsw                     0            1           0

Licenses installed:
  License identifier: G03000002223
  State: valid
  License version: 2
  Valid for device: JN001875AB
  Features:
    bgp-reflection   - Border Gateway Protocol route reflection

  License identifier: G03000002224
  State: valid
  License version: 2
  Valid for device: JN001875AB
  Features:
    dlsw             - Data-Link Switching (DLSw) protocol

  License identifier: G03000002225
  State: valid
  License version: 2
  Valid for device: JN001875AB
  Features:
    j-flow           - J-FLOW traffic analysis (CFLOW reporting)
```

What It Means The output shows a list of the license usage and a list of the licenses installed on the Services Router. Verify the following information:

- Each license is present. Licenses are listed in ascending alphanumeric order by license ID.
- The state of each license is valid.

A state of invalid indicates that the license key is not a valid license key. Either it was entered incorrectly or it is not valid for the specific device.

- The feature for each license is the expected feature. The features enabled are listed by license. An all-inclusive license has All features listed.
- All configured features have the required licenses installed. The Licenses needed column must show that no licenses are required.

Displaying License Usage

Purpose Verify that the licenses fully cover the feature configuration on the Services Router.

Action From the CLI, enter the show system license usage command.

```
user@router> show system license usage
                 Licenses     Licenses    Licenses
  Feature name               used       installed    needed
  j-flow                     0            0           1
  bgp-reflection             1            1           0
  dlsw                       1            1           0
```

What It Means The output shows a list of the licenses installed on the Services Router and how they are used. Verify the following information:

- Each licensed feature is present. Features are listed in ascending alphabetical order by license name. The number of licenses is shown in the third column. Verify that the appropriate number of licenses are installed.
- The number of used licenses matches the number of configured features. If a licensed feature is configured, the feature is considered used. The sample output shows that the DLSw and BGP route reflection features are configured.
- A license is installed on the Services Router for each configured feature. For every feature configured that does not have a license, one license is needed.

  For example, the sample output shows that the user has configured the J-Flow traffic analysis feature but has not purchased the license for it. An additional license is required to be in compliance with license agreements.

Displaying Installed License Keys

Purpose Verify the license keys installed on the Services Router.

Action From the CLI, enter the show system license keys command.

```
user@router> show system license keys

G03000002223 aeaqea qkjjhd ambrha 3tkqkc ayareb zicik6
             nv6jck btlxao 2trfyq 65cdou r5tbbb xdarpg
             qq53lu qcx4vm ydakcs t3yyh2 v5mq

G03000002224 aeaqea qkjjhd ambrha 3tkqkc ayargb zicik6
             nv6jck btlxao 2trfyq 65cdou r5tbof l4uon5
```

```
              7rokz7 wgdocl r4q32p 2wu4zf zrxa

G03000002225 aeaqea qkjjhd ambrha 3tkqkc ayarab zicik6
              nv6jck btlxao 2trfyq 65cdou r5tbiu jr6ui2
              lmqgqj ouzq5a aiokdn 4tr4u2 wmcq
```

What It Means The output shows a list of the license keys installed on the Services Router. Verify that each expected license key is present.

Part 3
Maintaining Services Router Hardware

- Replacing Hardware Components on page 175
- Troubleshooting Hardware Components on page 213
- Contacting Customer Support and Returning Hardware on page 217

Chapter 10

Replacing Hardware Components

Because many of the Services Router's hardware components are field-replaceable units (FRUs), you can remove and replace them yourself. When you need to replace a router component, contact your customer support or sales representative to order the field-replaceable unit (FRU) that contains the component. For instructions, see "Contacting Customer Support and Returning Hardware" on page 217.

This chapter contains the following topics:

- Tools and Parts Required on page 175
- Replacing the Console Port Cable on page 176
- Replacing a PIM on page 176
- Replacing PIM Cables on page 179
- Removing and Replacing the Chassis Cover on J2320 and J2350 Routers on page 180
- Replacing Internal Compact Flashes on J2320 and J2350 Routers on page 182
- Replacing Internal Compact Flashes on J4350 and J6350 Routers on page 185
- Replacing External Compact Flashes on page 188
- Replacing USB Storage Devices on page 190
- Replacing DRAM Modules on page 192
- Replacing Power System Components on page 195
- Replacing Crypto Accelerator Modules on J2320 and J2350 Routers on page 202
- Replacing Crypto Accelerator Modules on J4350 and J6350 Routers on page 205
- Replacing Air Filters on J2350 Routers on page 209
- Replacing Air Filters on J4350 and J6350 Routers on page 210

Tools and Parts Required

To replace hardware components, you need the tools and parts listed in Table 69 on page 176.

Table 69: Tools and Parts Required

Tool or Part	Components
Electrostatic bag or antistatic mat	All
Electrostatic discharge (ESD) grounding wrist strap	All
Flat-blade screw-blade screwdriver, approximately 1/4 in. (6 mm)	PIM
Phillips (+) screwdriver, number 1 and number 2	■ Chassis cover ■ Compact flash ■ Crypto Accelerator Module ■ DRAM modules ■ PIM ■ Power system components

Replacing the Console Port Cable

The RJ-45 port labeled CONSOLE on the Services Router's front panel allows you to connect the router to an external management device, such as a laptop or a terminal server. For cable specifications, see “Chassis Console Port Pinouts” on page 238.

To replace the console port cable:

1. Locate an appropriate replacement cable and connector.
2. Plug the Ethernet connector at either end of the cable into the console port on the front panel (see Figure 69 on page 142 and Figure 70 on page 143).
3. Plug the connector at the other end of the cable into the external management device. If you are connecting to a DB-9 serial port, use the provided RJ-45 to DB-9 serial port adapter.

Replacing a PIM

To remove or install field-replaceable Physical Interface Modules (PIMs) in a Services Router, you must first power off the router. This section contains the following topics:

■ Removing a PIM on page 176

■ Installing a PIM on page 178

Removing a PIM

The PIMs are installed in the front of the Services Router. A PIM weighs less than 1 lb (0.5 kg).

CAUTION: Do not hot-swap PIMs. Failure to power off the router before removing or installing a PIM might result in damage to the hardware.

Figure 74: Removing a PIM

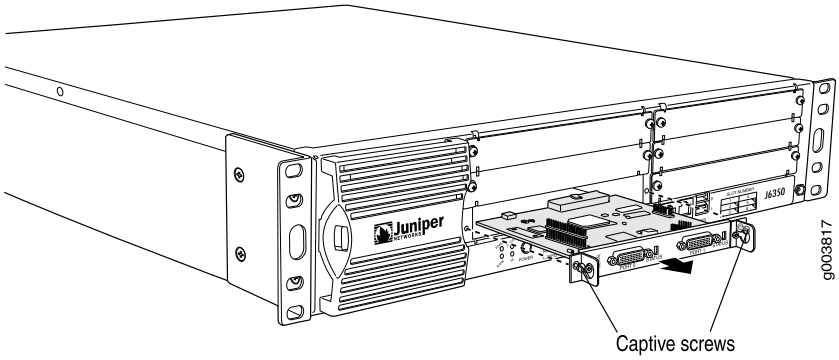

To remove a PIM (see Figure 74 on page 177):

1. Place an electrostatic bag or antistatic mat on a flat, stable surface to receive the PIM.
2. Attach an electrostatic discharge (ESD) grounding strap to your bare wrist and connect the strap to the ESD point on the chassis, or to an outside ESD point if the Services Router is disconnected from earth ground. For more information about ESD, see "Preventing Electrostatic Discharge Damage" on page 255.
3. Press and release the power button to power off the router. Verify that the POWER LED blinks and then turns off.
4. Label the cables connected to the PIM so that you can later reconnect each cable to the correct PIM.
5. Disconnect the cables from the PIM.
6. If necessary, arrange the cables to prevent them from dislodging or developing stress points:
   - Secure each cable so that it is not supporting its own weight as it hangs to the floor.
   - Place excess cable out of the way in a neatly coiled loop.
   - Use fasteners to maintain the shape of cable loops.
7. Loosen the captive screws on each side of the PIM faceplate.
8. Grasp the handles on each side of the PIM faceplate, and slide the PIM out of the router. Place it in the electrostatic bag or on the antistatic mat.
9. If you are not reinstalling a PIM into the emptied slot, install a blank PIM panel over the slot to maintain proper airflow.

Installing a PIM

CAUTION: Do not hot-swap PIMs. Failure to power off the router before removing or installing a PIM might result in damage to the hardware.

Figure 75: Installing a PIM

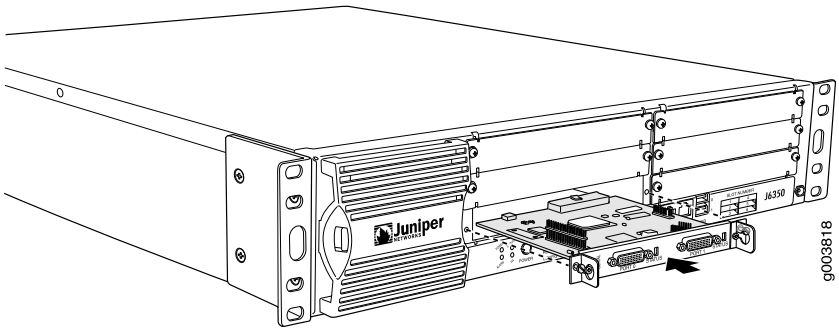

CAUTION: Do not install a combination of PIMs in a single chassis that exceeds the maximum power and heat capacity of the chassis. If J-series power management is enabled, PIMs that exceed the maximum power and heat capacity remain offline when the chassis is powered on.

To verify that the combination of PIMs to be installed in a chassis do not exceed the power and heat capacities for the J4350 or J6350 router, see "Planning for Power Management" on page 114.

To install a PIM (see Figure 75 on page 178):

1. Attach an electrostatic discharge (ESD) grounding strap to your bare wrist and connect the strap to the ESD point on the chassis, or to an outside ESD point if the Services Router is disconnected from earth ground. For more information about ESD, see "Preventing Electrostatic Discharge Damage" on page 255.
2. Press and release the power button to power off the router. Verify that the POWER LED blinks and then turns off.
3. Align the notches in the connector at the rear of the PIM with the notches in the PIM slot in the Services Router, and slide the PIM in until it lodges firmly in the router.

CAUTION: Slide the PIM straight into the slot to avoid damaging the components on the PIM.

4. Tighten the captive screws on each side of the PIM faceplate.
5. Insert the appropriate cables into the cable connectors on the PIM.

6. If necessary, arrange the cables to prevent them from dislodging or developing stress points:
   - Secure each cable so that it is not supporting its own weight as it hangs to the floor.
   - Place excess cable out of the way in a neatly coiled loop.
   - Use fasteners to maintain the shape of cable loops.
7. Press and release the power button to power on the router. Verify that the POWER LED lights steadily.

Replacing PIM Cables

Removing and installing PIM cables does not affect Services Router function, except that a PIM does not receive or transmit data while its cable is disconnected. To replace a PIM cable, perform the following procedures:

- Removing PIM Cables on page 179
- Installing PIM Cables on page 179

Removing PIM Cables

To remove a PIM cable:

1. If you are removing all cables connected to the PIM, issue the following CLI command to take the PIM offline:

   ```
   user@host> request chassis fpc slot  pim-slot offline
   ```

   For example, to take the PIM in slot 4 offline, enter the following command:

   ```
   user@host> request chassis fpc slot 4 offline
   ```

   For more information about the command, see the *JUNOS System Basics and Services Command Reference*.
2. Unplug the cable from the cable connector port.
3. Detach the cable from the destination port.

Installing PIM Cables

To install a PIM cable:

1. Have ready a length of the type of cable used by the PIM. For cable specifications, see “Network Cable Specifications and Connector Pinouts” on page 227.
2. Insert the cable connector into the cable connector port on the PIM faceplate.

3. Arrange the cable as necessary to prevent it from dislodging or developing stress points:
   - Secure the cable so that it is not supporting its own weight as it hangs to the floor.
   - Place excess cable out of the way in a neatly coiled loop.
   - Use fasteners to maintain the shape of cable loops.
4. Insert the other end of the cable into the destination port.
5. Repeat the previous steps for any additional cables.
6. If the PIM is offline (its status LED is steadily red), issue the following CLI command to bring the PIM online:

   ```
   user@host> request chassis fpc slot pim-slot online
   ```

   For example, to bring the PIM in slot 4 online, enter the following command:

   ```
   user@host> request chassis fpc slot 4 online
   ```

   For more information about the command, see the *JUNOS System Basics and Services Command Reference*.
7. Verify that the PIM status LED shines steadily green to confirm that the PIM is online.

   You can also verify correct PIM functioning by issuing the show chassis fpc pic-status command described in the *JUNOS System Basics and Services Command Reference*.



NOTE: In the show chassis fpc pic-status command, the PIM slot number is reported as an FPC number and the PIM number (always 0) is reported as a PIC number. For more information about network interface naming, see *J-series Services Router Basic LAN and WAN Access Configuration Guide*.

Removing and Replacing the Chassis Cover on J2320 and J2350 Routers

On J2320 and J2350 routers, the chassis cover fits tightly on the chassis. To remove the cover from the chassis:

1. Press and release the power button to power off the router. Wait for the POWER LED to turn off.
2. Remove the power cable from the power source receptacle.
3. With a Phillips screwdriver remove the grounding screw.
4. Remove the router from the rack.

5. With a Phillips screwdriver remove the flat head screws from the rear and sides of the chassis.
6. Position the router so that you face the front panel.
7. Place your hands on the cover and press down while pushing the cover back until the two front tabs disengage from the chassis base (see Figure 76 on page 181).

Figure 76: Sliding the Chassis Cover

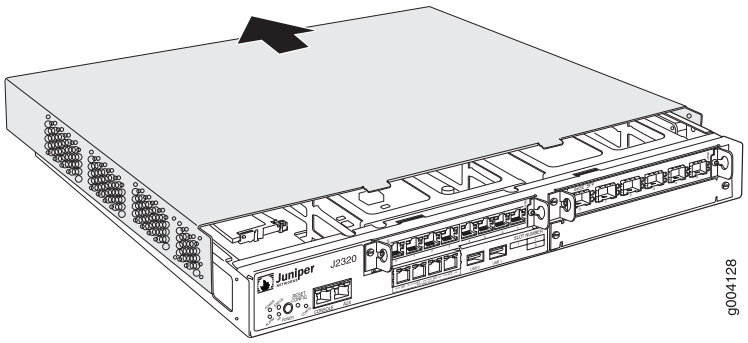

8. Lift the cover upward and pull it away from the tabs on the rear of the chassis (see Figure 77 on page 181).

Figure 77: Removing and Replacing the Chassis Cover

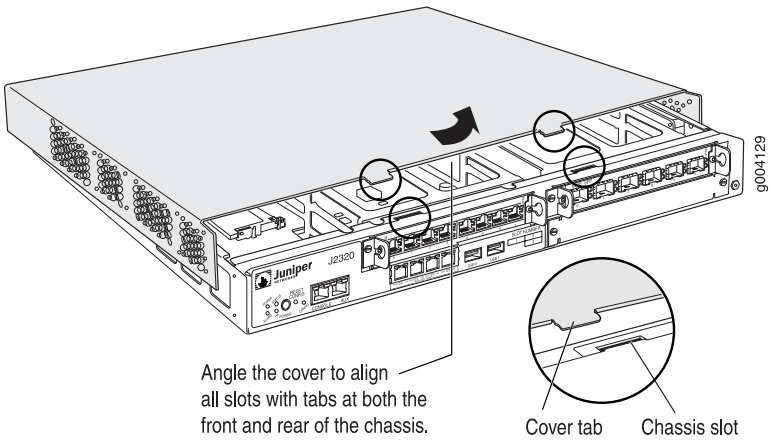

To replace the cover on the J2320 and J2350 chassis:

1. Lower the cover onto the chassis so that the front edge of the cover is a few inches away from the front edge of the chassis base (see Figure 77 on page 181).
2. Tilt the cover and align the rear tabs with the slots at the bottom of the chassis (see Figure 78 on page 182).

Figure 78: Matching the Chassis Slots and Tabs

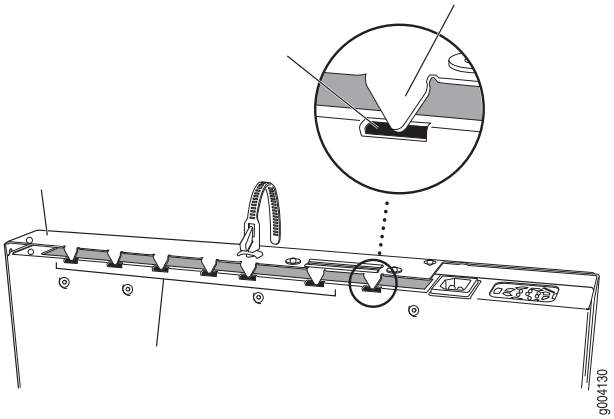

3. Lower the cover fully onto the base, and slide it so that the front tabs match the front slots and the chassis cover and base edges align completely.
4. Insert and tighten the flat head screws with a Phillips screwdriver.
5. Return the router to its installation site, and attach the grounding cable and the power cables. (See "Connecting Power" on page 126.)
6. Press and release the power button to power on the router. Verify that the POWER LED lights steadily.

Replacing Internal Compact Flashes on J2320 and J2350 Routers

The internal compact flash provides primary storage for the router and is installed in a slot on the bottom of the J2320 or J2350 chassis (see Figure 79 on page 183). It can accommodate software images, configuration files, and microcode. For information about configuring the internal compact flash, see the *J-series Services Router Administration Guide*.

NOTE: Use only compact flash cards purchased from Juniper Networks for your J-series platform and model.

Figure 79: Location of J2320 and J2350 Internal Compact Flash

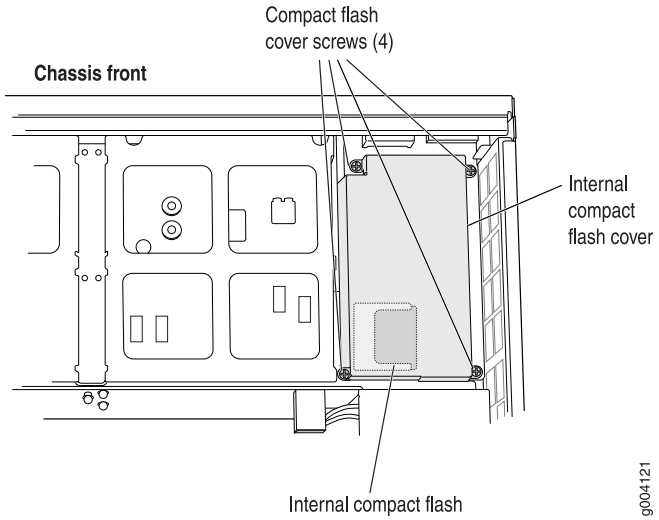

To replace the internal compact flash:

1. Place an electrostatic bag or antistatic mat on a flat, stable surface.
2. Attach an electrostatic discharge (ESD) grounding strap to your bare wrist and connect the strap to the ESD point on the chassis, or to an outside ESD point if the router is disconnected from earth ground. For more information about ESD, see "Preventing Electrostatic Discharge Damage" on page 255.
3. Press and release the power button to power off the router. Wait for the POWER LED to turn off.
4. Remove the power cable from the power source receptacle.
5. Remove chassis cover. (See "Removing and Replacing the Chassis Cover on J2320 and J2350 Routers" on page 180.)

WARNING: If the fans are still rotating, wait until they stop before proceeding with the next step.

---

6. With a Phillips screwdriver, loosen the pan head screws that secure the internal compact flash slot cover.
7. Remove the compact flash slot cover.
8. Gently grasp the compact flash, and slide it out of the compact flash slot (see Figure 80 on page 184).

Figure 80: Removing the J2320 or J2350 Internal Compact Flash

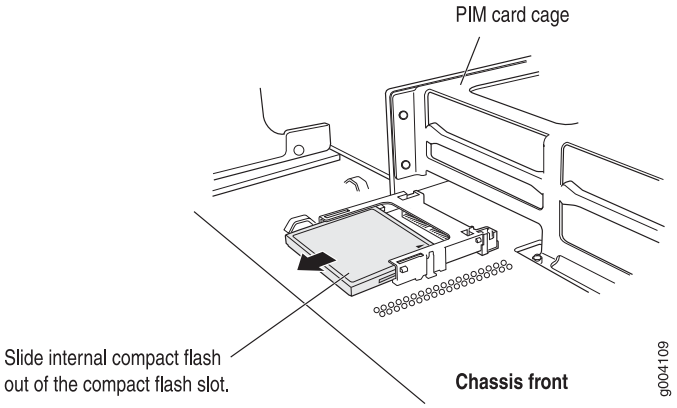

9. Place the compact flash on the antistatic mat or in the electrostatic bag.
10. With the vendor name and memory size facing up and the arrow pointing towards the router, insert the new compact flash into the compact flash slot (see Figure 81 on page 184).

Figure 81: Inserting the J2320 or J2350 Internal Compact Flash

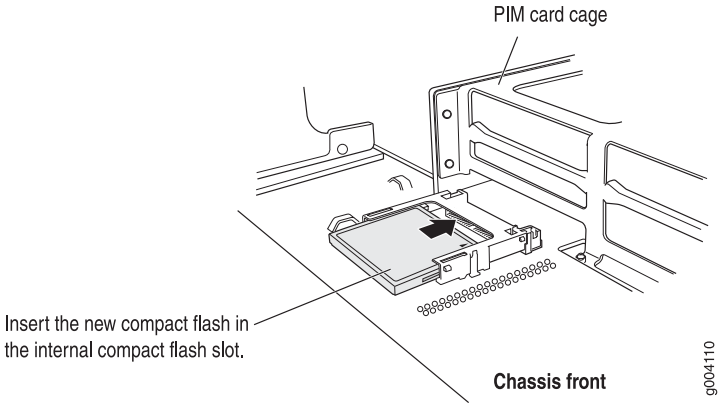

11. Replace the compact flash slot cover.
12. Tighten the pan head screws that secure the compact flash slot cover.
13. Slide the chassis cover onto the chassis.
14. Replace the chassis cover. (See “Removing and Replacing the Chassis Cover on J2320 and J2350 Routers” on page 180.)
15. Replace the power cable.
16. Press and release the power button to power on the router. Verify that the POWER LED lights steadily.

Replacing Internal Compact Flashes on J4350 and J6350 Routers

The internal compact flash is installed in a slot on the bottom of the J4350 or J6350 chassis (see Figure 82 on page 185).

NOTE: Use only compact flash cards purchased from Juniper Networks for your J-series platform and model.

Figure 82: Location of J4350 and J6350 Compact Flash

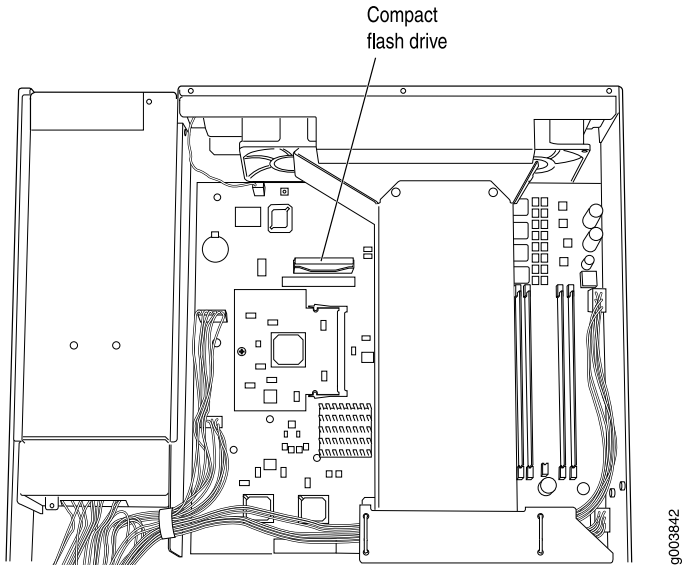

On some J4350 and J6350 Services Routers, the compact flash is in a horizontal position, while on others it is in a vertical position. Figure 83 on page 186 shows the alternative horizontal orientation of the compact flash.

Figure 83: Alternative Horizontal Orientation of J4350 and J6350 Compact Flash

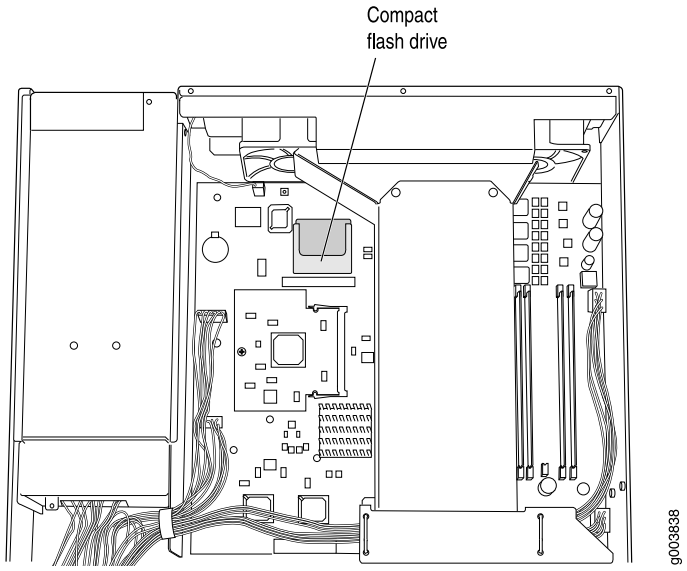

To replace the compact flash:

1. Place an electrostatic bag or antistatic mat on a flat, stable surface.
2. Attach an electrostatic discharge (ESD) grounding strap to your bare wrist and connect the strap to the ESD point on the chassis, or to an outside ESD point if the router is disconnected from earth ground. For more information about ESD, see "Preventing Electrostatic Discharge Damage" on page 255.
3. Press and release the power button to power off the router. Wait for the POWER LED to turn off.
4. Remove the power cord or cable from the power source receptacle.
5. Remove the screws from the sides and top of the chassis that secure the cover to the chassis.
6. Slide the cover off the chassis.

WARNING: If the fans are still rotating, wait until they stop before proceeding with the next step, especially if your compact flash is in the horizontal position (flat against the system board).

7. Slide the compact flash out of its slot, as shown in Figure 84 on page 187.

Figure 84: Removing the J4350 or J6350 Compact Flash

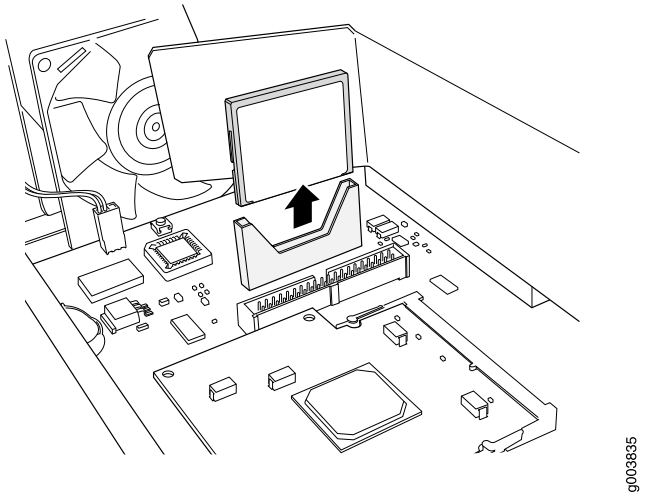

8. Place the compact flash on the antistatic mat or in the electrostatic bag.
9. Slide the new compact flash into the slot and press down, as shown in Figure 85 on page 187.

Figure 85: Inserting the J4350 or J6350 Compact Flash

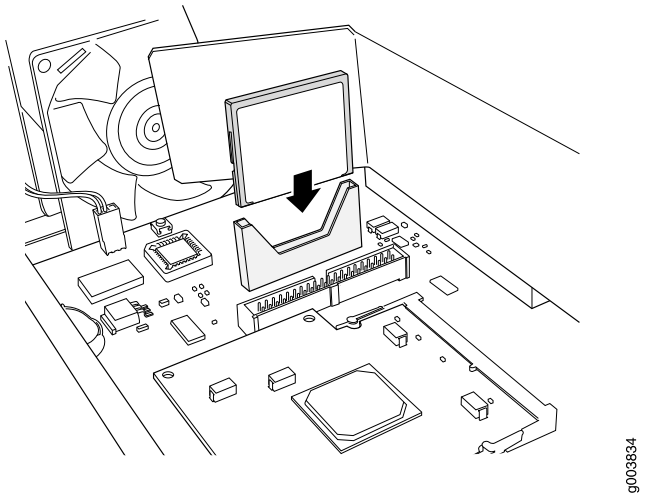

NOTE: On some Services Routers the compact flash is in a horizontal position. If the compact flash connection is horizontal, lay the compact flash behind the slot and slide it forward until it clicks into place.

10. Slide the cover onto the chassis.
11. Replace and tighten the screws on the sides and top of the chassis that secure the cover to the chassis.

12. Replace the power cord or cable.
13. Press and release the power button to power on the router. Verify that the POWER LED lights steadily.

Replacing External Compact Flashes

The external compact flash is an optional component on J2320 and J2350 Services Routers. It provides secondary storage for the router and can accommodate software images, configuration files, and microcode. If the internal compact flash fails on startup, the router boots from the external compact flash.

For information about configuring the external compact flash, see the *J-series Services Router Administration Guide*.



NOTE: Depending on your configuration, the Services Router might not have an external compact flash. If no external compact flash is installed, proceed directly to Step 10 to install the compact flash.

The external compact flash is installed in a slot on the rear of the J2320 or J2350 chassis.

To replace the external compact flash:

1. Verify the device that the router used to boot by running the show system storage command from the CLI. For example:

```
user@host> show system storage

Filesystem        512-blocks       Used      Avail Capacity Mounted on
/dev/ad0s1a           218254     175546      40526     81%  /
...
```

   The boot device is mounted on /. The internal compact flash is located at ad0. The external compact flash is located at ad2. The USB storage device is located at da0. This example shows that the router booted from the internal compact flash.

   If the show system storage output indicates that the router booted from the external compact flash, you need to power off the router before replacing the compact flash.

2. Place an electrostatic bag or antistatic mat on a flat, stable surface.
3. Attach an electrostatic discharge (ESD) grounding strap to your bare wrist and connect the strap to the ESD point on the chassis, or to an outside ESD point if the router is disconnected from earth ground. For more information about ESD, see “Preventing Electrostatic Discharge Damage” on page 255.
4. Press and release the power button to power off the router. Wait for the POWER LED to turn off before you remove the compact flash.

Skip this step, if the router did not boot from the external compact flash (see step 1).

5. With a Phillips screwdriver, loosen the pan head screws that secure the external compact flash cover to the rear of the chassis (see Figure 86 on page 189).

Figure 86: Removing the External Compact Flash Cover

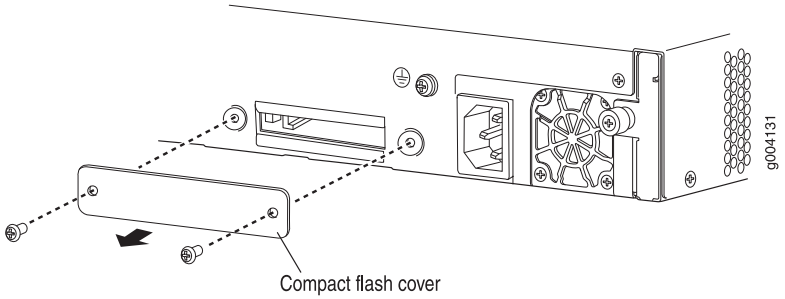

6. Remove the compact flash cover.
7. Eject the external compact flash by pressing the ejector button to the left of the compact flash slot once to unlock the button, and again to eject the compact flash (see Figure 87 on page 189).

Figure 87: Removing the External Compact Flash

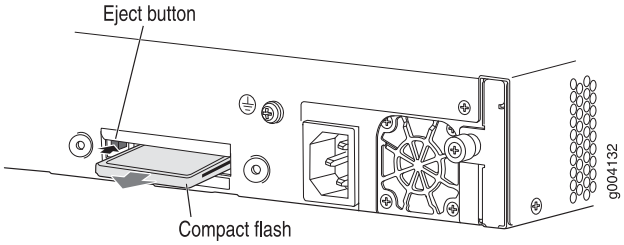

8. Gently grasp the compact flash, and slide it out of the slot.
9. Place the compact flash on the antistatic mat or in the electrostatic bag.
10. With the vendor name and memory size facing up and the arrow pointing towards the router, insert the new compact flash in the external compact flash slot (see Figure 88 on page 189).

Figure 88: Inserting the External Compact Flash

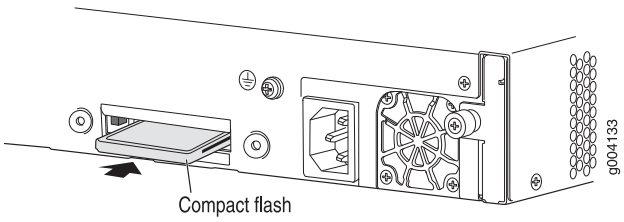

11. Replace the compact flash slot cover.

12. Tighten the pan head screws that secures the compact flash slot cover to the rear of the chassis.
13. Plug the power cord into the power supply.
14. Press and release the power button to power on the router. Verify that the POWER LED lights steadily.

Replacing USB Storage Devices

USB storage devices are optional components on J-series Services Routers. If installed, a USB storage device provides secondary storage for the router. It can accommodate software images, configuration files, and microcode. If the internal compact flash fails on startup, and the external compact flash is not installed or fails, the router boots from the USB storage device.

For information about configuring the USB storage device, see the *J-series Services Router Administration Guide*.



NOTE: For a list of supported USB storage devices, see the *J-series Services Router Release Notes* at http://www.juniper.net.

To remove and install a USB storage device, perform the following procedures:

- Removing the USB Storage Device on page 190
- Installing the USB Storage Device on page 191

Removing the USB Storage Device



NOTE: Depending on your configuration, the Services Router might not have a USB storage device. If no USB storage device is installed, proceed directly to "Installing the USB Storage Device" on page 191.

The USB storage device is installed into the USB port on the front panel of the Services Router. To remove the USB storage device:

1. Verify the device that the router used to boot, by running the show system storage command from the CLI. For example:

```
user@host> show system storage

Filesystem        512-blocks       Used      Avail Capacity Mounted on
/dev/ad0s1a           218254     175546      40526     81%  /
...
```

   The boot device is mounted on /. The internal compact flash is located at ad0. The external compact flash is located at ad2. The USB storage device is located at da0. This example shows that the router booted from the internal compact flash.

   If the show system storage output indicates that the router booted from the external compact flash, you need to power off the router before replacing the compact flash.

2. Place an electrostatic bag or antistatic mat on a flat, stable surface.
3. Attach an electrostatic discharge (ESD) grounding strap to your bare wrist and connect the strap to the ESD point on the chassis, or to an outside ESD point if the router is disconnected from earth ground. For more information about ESD, see “Preventing Electrostatic Discharge Damage” on page 255.
4. Press and release the power button to power off the router. Wait for the POWER LED to turn off before you remove the compact flash.

   Skip this step, if the router did not boot from the external compact flash (see step 1).

5. Gently grasp the USB storage device and slide it out of the USB port.
6. Place the USB storage device on the antistatic mat or in the electrostatic bag.

Installing the USB Storage Device

To install the USB storage device:



NOTE: For a list of supported USB storage devices, see the *J-series Services Router Release Notes* at http://www.juniper.net.

1. Attach an electrostatic discharge (ESD) grounding strap to your bare wrist and connect the strap to the ESD point on the chassis, or to an outside ESD point if the router is disconnected from earth ground. For more information about ESD, see “Preventing Electrostatic Discharge Damage” on page 255.
2. Orient the USB storage device with the USB port on the front panel of the router.

3. Insert the USB storage device into the USB port. If the USB storage device does not easily slide into the port, it might not be oriented correctly. Turn the USB storage device upside-down and try again.
4. To configure the USB storage device with the request system snapshot command, see the *J-series Services Router Administration Guide*.

Replacing DRAM Modules

The DRAM installed on the Routing Engine provides storage for the routing and forwarding tables and for other Routing Engine processes. The design of the Routing Engine allows you to modify the DRAM configuration by adding DRAM modules to the system board, or removing DRAM modules from the board.

The DRAM modules are located on the top of the system board, as shown in Figure 89 on page 192 and Figure 90 on page 193. Two pairs of slots are available for installing DRAM modules. Installing DRAM modules in slots away from each other provides better performance than installing them in two adjacent slots.

NOTE: Use only DRAM modules purchased through Juniper Networks specifically for your model.

Figure 89: J2320 and J2350 DRAM Location

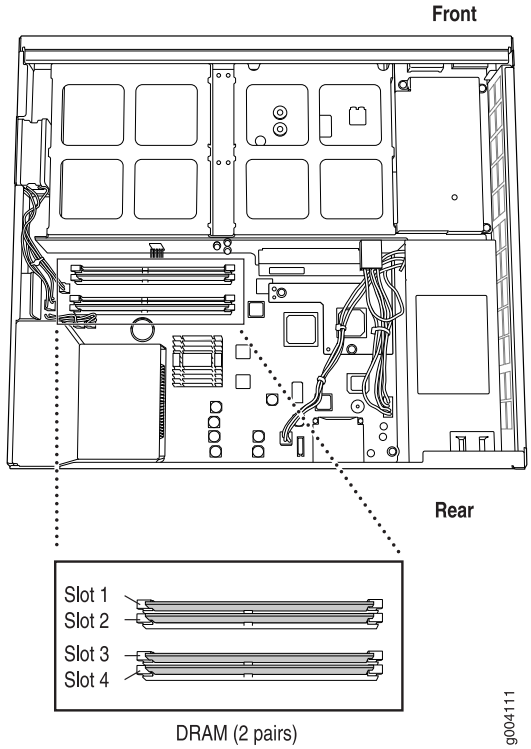

Figure 90: J4350 and J6350 DRAM Location

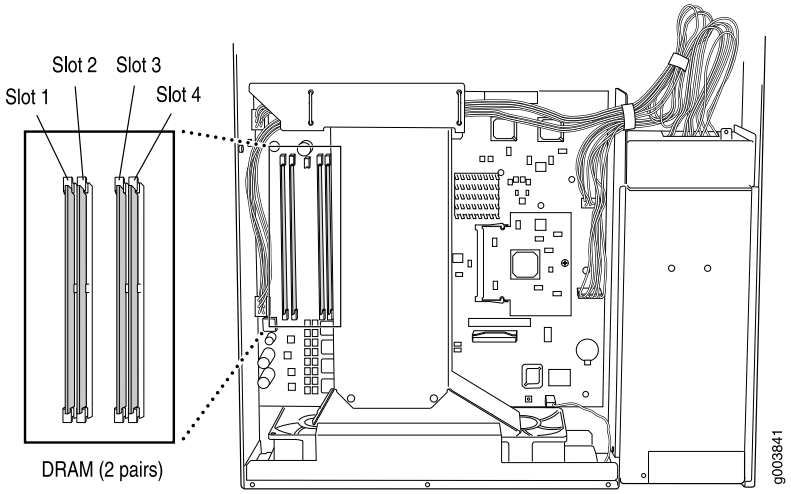

To modify the DRAM configuration, use the following procedures:

- Removing a DRAM Module on page 193
- Installing a DRAM Module on page 194

Removing a DRAM Module

To remove a DRAM module:

1. Place an electrostatic bag or antistatic mat on a flat, stable surface.
2. Attach an electrostatic discharge (ESD) grounding strap to your bare wrist and connect the strap to the ESD point on the chassis, or to an outside ESD point if the router is disconnected from earth ground. For more information about ESD, see the Getting Started Guide for your router.
3. Press and release the power button to power off the router. Wait for the POWER LED to turn off.
4. Unplug the power cord or cable from the power source receptacle.
5. Remove the screws from the sides and top of the chassis that secure the cover to the chassis.
6. Slide the cover off the chassis. (For J2320 and J2350 routers, see “Removing and Replacing the Chassis Cover on J2320 and J2350 Routers” on page 180.)
7. To release the DRAM module, press the plastic ejectors on both sides of the module (see Figure 91 on page 194).
8. Grasp the DRAM module, being careful not to touch any electrical components on the module, and firmly pull it out of the slot on the system board.
9. Place the DRAM module on the antistatic mat or in the electrostatic bag.

Figure 91: Installing or Replacing DRAM Modules

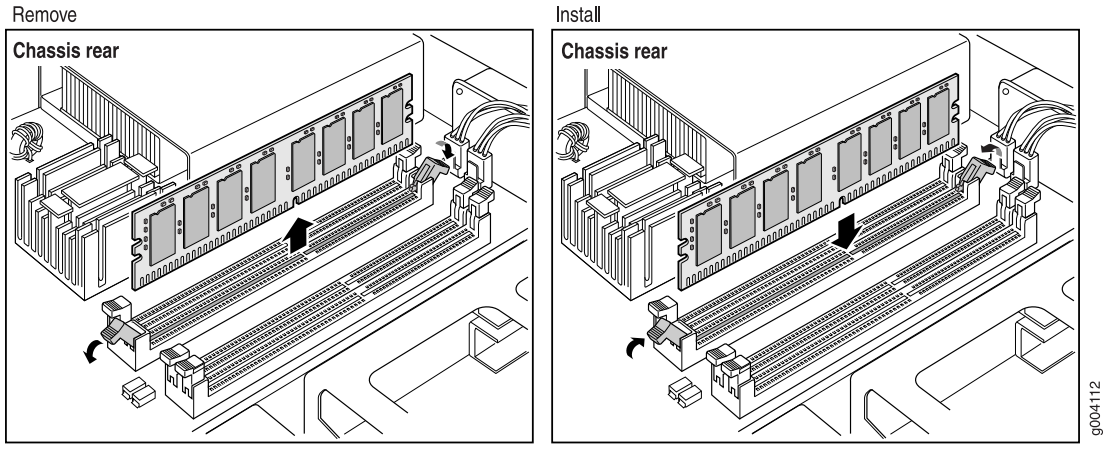

Installing a DRAM Module

J2320, J2350, J4350 and J6350 Services Routers support 256-MB and 512-MB DRAM modules. Use only DRAM modules purchased from Juniper Networks specifically for your model.

NOTE: If you are installing a second DRAM module, do not install it in a slot adjacent to the first module. For example, if the first DRAM module is installed in slot 1, install the second module in slot 3 (see Figure 89 on page 192 and Figure 90 on page 193).

To install a DRAM module:

1. Take the following steps if you have not already done so:
   a. Attach an electrostatic discharge (ESD) grounding strap to your bare wrist and connect the strap to the ESD point on the chassis, or to an outside ESD point if the router is disconnected from earth ground. For more information about ESD, see the Getting Started Guide for your router.
   b. Press and release the power button to power off the router. Wait for the POWER LED to turn off.
   c. Unplug the power cord or cable from the power source receptacle.
   d. Remove the screws from the sides and top of the chassis that secure the cover to the chassis.
   e. Slide the cover off the chassis. (For J2320 and J2350 routers, see "Removing and Replacing the Chassis Cover on J2320 and J2350 Routers" on page 180.)
2. Remove the DRAM module from its electrostatic bag.
3. Press the plastic ejectors on both sides of the DRAM slot to open it (see Figure 91 on page 194).
4. Grasp the DRAM module by the edges, being careful not to touch any electrical components.

5. Pressing firmly on both ends, push the module into the slot until the ejectors click into the closed position (see Figure 91 on page 194).
6. Slide the cover onto the chassis.
7. Replace and tighten the screws on the sides and top of the chassis that secure the cover to the chassis.
8. Replace the power cord or cable.
9. Press and release the power button to power on the router. Verify that the POWER LED lights steadily.
10. To view the DRAM configuration and verify that it was installed correctly, issue the show chassis routing-engine command, described in the *JUNOS System Basics and Services Command Reference*. This command shows the total memory installed.

Replacing Power System Components

The power cords on all Services Routers are replaceable.

You can add a second power supply to the J6350 Services Router that is of the same type as the first (either AC or DC). The power supplies are located at the right rear of the chassis (see Figure 15 on page 28 and Figure 17 on page 29). Each J6350 power supply provides power to all components in the router. The J6350 power supplies are fully redundant. If one power supply fails or is removed, the remaining power supply instantly assumes the entire electrical load. One power supply can provide full power for as long as the router is operational.

Each J6350 power supply is hot-insertable and hot-removable.



CAUTION: Do not leave a power supply slot empty for more than a short time while the Services Router is operational. The power supply or a blank power supply panel must remain in the chassis for proper airflow.

To replace power system components, use the following procedures:

- Replacing AC Power Supply Cords on page 195
- Removing an AC Power Supply from J6350 Routers on page 196
- Installing an AC Power Supply in J6350 Routers on page 197
- Replacing DC Power Supply Cables on page 198
- Removing a DC Power Supply on page 199
- Installing a DC Power Supply on page 200

Replacing AC Power Supply Cords

To replace the AC power cord for a redundant power supply:

1. Locate a replacement power cord with the type of plug appropriate for your geographical location (see "AC Power, Connection, and Power Cord Specifications" on page 111).
2. Attach an electrostatic discharge (ESD) grounding strap to your bare wrist and connect the strap to the ESD point on the chassis, or to an outside ESD point if the router is disconnected from earth ground. For more information about ESD, see "Preventing Electrostatic Discharge Damage" on page 255.
3. Press and release the power button to power off the router. Wait for the POWER LED to turn off.



NOTE: If the power supply is a redundant power supply in a J6350 Services Router, you can leave the router powered on and power flowing in the other power supply.

4. Unplug the power cord from the power source receptacle.
5. Unplug the power cord from the appliance inlet on the power supply faceplate.
6. Insert the appliance coupler end of the replacement power cord into the appliance inlet on the power supply faceplate.
7. Insert the power cord plug into an AC power source receptacle.



NOTE: Each power supply must be connected to a dedicated AC power feed. For information about connecting to AC power sources, see "Connecting Power" on page 126.

8. Verify that the power cord does not block access to Services Router components or drape where people might trip on it.
9. Press and release the power button to power on the router. Verify that the POWER LED lights steadily.

Removing an AC Power Supply from J6350 Routers

The power supplies are located at the right rear of the chassis. A power supply weighs 2.4 lb (1.1 kg).

To remove an AC power supply from a J6350 Services Router (see Figure 92 on page 197):

1. Attach an electrostatic discharge (ESD) grounding strap to your bare wrist and connect the strap to the ESD point on the chassis, or to an outside ESD point if the router is disconnected from earth ground. For more information about ESD, see "Preventing Electrostatic Discharge Damage" on page 255.
2. Press and release the power button to power off the Services Router. Wait for the POWER LED to turn off.

NOTE: If the power supply is a redundant power supply in a J6350 Service Router, you can leave the router powered on and power flowing in the other power supply.

3. Unplug the power cord from the power source receptacle.
4. Unplug the power cord from the appliance inlet on the power supply faceplate.
5. Slide the ejector tab on the power supply faceplate to the right and hold it in place to unlock the power supply.
6. Grasp the handle on the power supply faceplate, and pull firmly to start removing the power supply. Slide it halfway out of the chassis (see Figure 92 on page 197).
7. Place one hand underneath the power supply to support it and slide it completely out of the chassis.
8. If you are not reinstalling a power supply into the emptied slot, install a blank power supply panel over the slot.

Figure 92: Removing an AC Power Supply

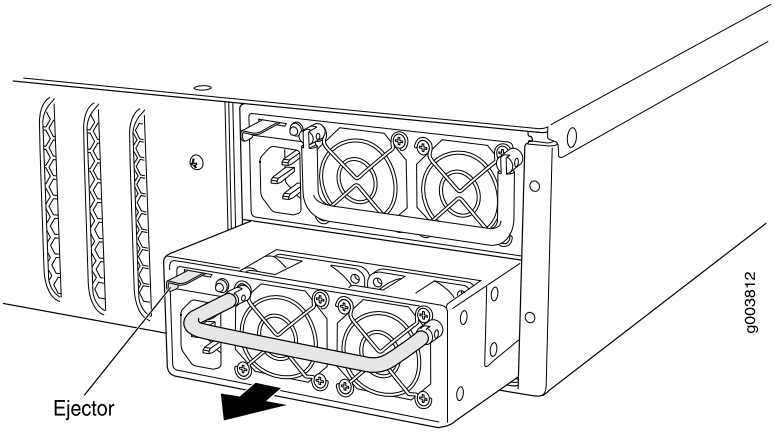

Installing an AC Power Supply in J6350 Routers

To install an AC power supply in a J6350 Services Router (see Figure 93 on page 198):

1. Attach an electrostatic discharge (ESD) grounding strap to your bare wrist and connect the strap to the ESD point on the chassis, or to an outside ESD point if the router is disconnected from earth ground. For more information about ESD, see “Preventing Electrostatic Discharge Damage” on page 255.
2. Using both hands, slide the power supply into the chassis until you feel resistance.
3. Firmly push the power supply into the chassis until it comes to a stop. Make sure that the power supply faceplate is flush with any adjacent power supply faceplate.
4. Insert the appliance coupler end of a power cord into the appliance inlet on the power supply faceplate.
5. Insert the power cord plug into an AC power source receptacle.

NOTE: Each power supply must be connected to a dedicated AC power feed. For information about connecting to AC power sources, see "Connecting Power" on page 126.

6. Verify that the power cord does not block access to router components or drape where people might trip on it.
7. Press and release the power button to power on the router. Verify that the POWER LED lights steadily.

Figure 93: Installing an AC Power Supply

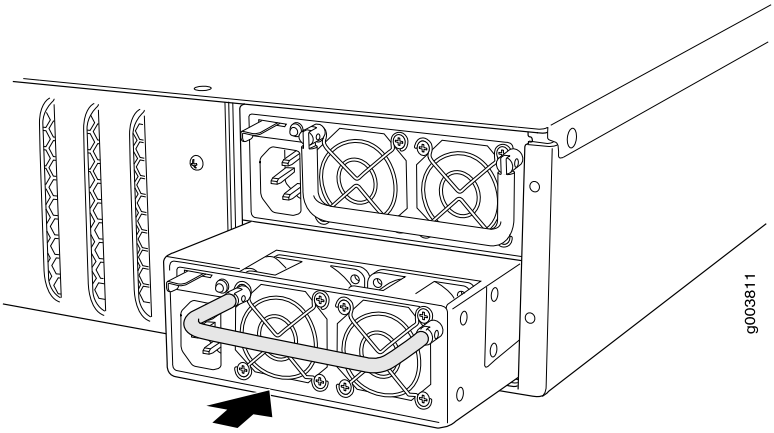

Replacing DC Power Supply Cables

To replace a power cable for a DC power supply:

1. Locate a replacement power cable and a lug that meet the specifications defined in "Chassis Grounding" on page 125 and "DC Power, Connection, and Power Cable Specifications" on page 113.

CAUTION: A licensed electrician must attach a cable lug to the power cable that you supply. A cable with an incorrectly attached lug can damage the router (for example, by causing a short circuit).

2. Attach an electrostatic discharge (ESD) grounding strap to your bare wrist and connect the strap to the ESD point on the chassis, or to an outside ESD point if the router is disconnected from earth ground. For more information about ESD, see "Preventing Electrostatic Discharge Damage" on page 255.
3. Press and release the power button to power off the Services Router. Wait for the POWER LED to turn off.
4. Ensure that the voltage across the DC power source cable leads is 0 V and that the cable leads cannot become active during installation.

CAUTION: You must ensure that power connections maintain the proper polarity. The power source cables might be labeled (+) and (–) to indicate their polarity. There is no standard color coding for DC power cables. The color coding used by the external DC power source at your site determines the color coding for the leads on the power cables that attach to the terminal studs on each power supply.

5. Remove the power cable from the DC power source.
6. Use a Phillips screwdriver to remove the clear plastic cover protecting the terminal block.
7. Within the terminal block, remove the screw that fastens the power cable lug to the terminal block.
8. Carefully move the power cable out of the way.
9. Using the removed screw, secure the replacement power cable (see 1) to the appropriate terminal. Tighten the screw until snug. Do not overtighten.

   The screw contains a captive washer used to secure the power cable lug to the terminal block.

NOTE: Each power supply must be connected to a dedicated DC power feed. For information about connecting to DC power sources, see "Connecting Power" on page 126.

10. Dress the power cable appropriately.
11. Replace the clear plastic cover over the terminal block.
12. Verify that the power cable does not block access to router components or drape where people might trip on it.
13. Press and release the power button to power on the router. Verify that the POWER LED lights steadily.

Removing a DC Power Supply

The power supplies are located at the right rear of the chassis. A power supply weighs 2.4 lb (1.1 kg).

To remove a DC power supply (see Figure 94 on page 200):

1. Attach an electrostatic discharge (ESD) grounding strap to your bare wrist and connect the strap to the ESD point on the chassis, or to an outside ESD point if the router is disconnected from earth ground. For more information about ESD, see "Preventing Electrostatic Discharge Damage" on page 255.
2. Press and release the power button to power off the Services Router. Wait for the POWER LED to turn off.
3. Ensure that the voltage across the DC power source cable leads is 0 V and that the cable leads cannot become active during installation.

CAUTION: You must ensure that power connections maintain the proper polarity. The power source cables might be labeled (+) and (–) to indicate their polarity. There is no standard color coding for DC power cables. The color coding used by the external DC power source at your site determines the color coding for the leads on the power cables that attach to the terminal studs on each power supply.

4. Remove the power cables from the DC power source.
5. Use a Phillips screwdriver to remove the clear plastic cover protecting the terminal block.
6. Within the terminal block, remove the screws that fasten the power cable lugs to the terminal block.
7. Carefully move the power cables out of the way.
8. Slide the ejector tab on the power supply faceplate to the right, and hold it in place to unlock the power supply.
9. Grasp the handle on the power supply faceplate, and pull firmly to start removing the power supply. Slide it halfway out of the chassis (see Figure 94 on page 200).
10. Place one hand underneath the power supply to support it, and slide it completely out of the chassis.
11. If you are not reinstalling a power supply into the emptied slot, install a blank power supply panel over the slot.

Figure 94: Removing a DC Power Supply

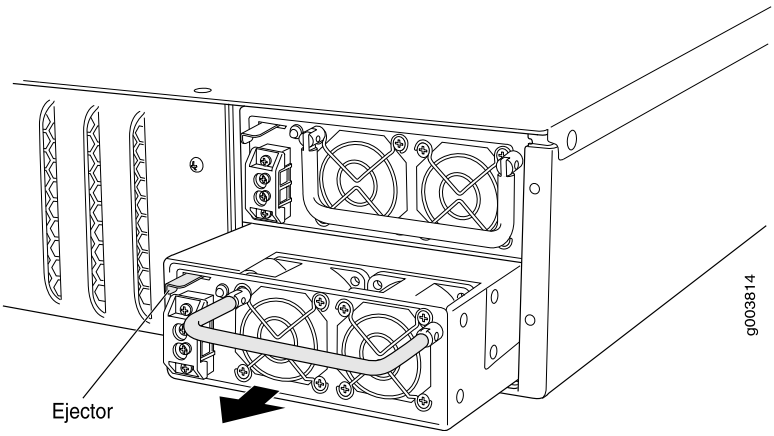

Installing a DC Power Supply

Each power supply in a DC-powered router must be connected to earth ground. A ground terminal is provided on each DC power supply for this purpose.

To install a DC power supply (see Figure 95 on page 202):

1. Ensure that the voltage across the DC power source cable leads is 0 V and that the cable leads cannot become active during installation.



CAUTION: You must ensure that power connections maintain the proper polarity. The power source cables might be labeled (+) and (–) to indicate their polarity. There is no standard color coding for DC power cables. The color coding used by the external DC power source at your site determines the color coding for the leads on the power cables that attach to the terminal studs on each power supply.

2. Attach an electrostatic discharge (ESD) grounding strap to your bare wrist and connect the strap to the ESD point on the chassis, or to an outside ESD point if the router is disconnected from earth ground. For more information about ESD, see "Preventing Electrostatic Discharge Damage" on page 255.
3. Using both hands, slide the power supply into the chassis until you feel resistance.
4. Firmly push the power supply into the chassis until it comes to a stop. Make sure that the power supply faceplate is flush with any adjacent power supply faceplate.
5. Use a Phillips screwdriver to remove the clear plastic cover protecting the terminal block.
6. Within the terminal block, remove the two center screws next to the labels –48 VDC and RTN.

   Each screw contains a captive washer to secure a power cable lug to the terminal block.
7. Using one of the removed screws, secure the positive (+) DC source power cable lug to the RTN terminal. Tighten the screw until snug. Do not overtighten. Apply between 8 lb-in. (0.9 Nm) and 9 lb-in. (1.02 Nm) of torque to the screw.
8. Using the other removed screw, secure the negative (–) DC source power cable lug to the –48 VDC terminal. Tighten the screw until snug. Do not overtighten. Apply between 8 lb-in. (0.9 Nm) and 9 lb-in. (1.02 Nm) of torque to the screw.



NOTE: Each power supply must be connected to a dedicated DC power feed. For information about connecting to DC power sources, see "Connecting Power" on page 126.

9. Dress the power cables appropriately.
10. Replace the clear plastic cover over the terminal block.
11. Verify that the power cord does not block access to router components or drape where people might trip on it.
12. Press and release the power button to power on the router. Verify that the POWER LED lights steadily.

Figure 95: Installing a DC Power Supply

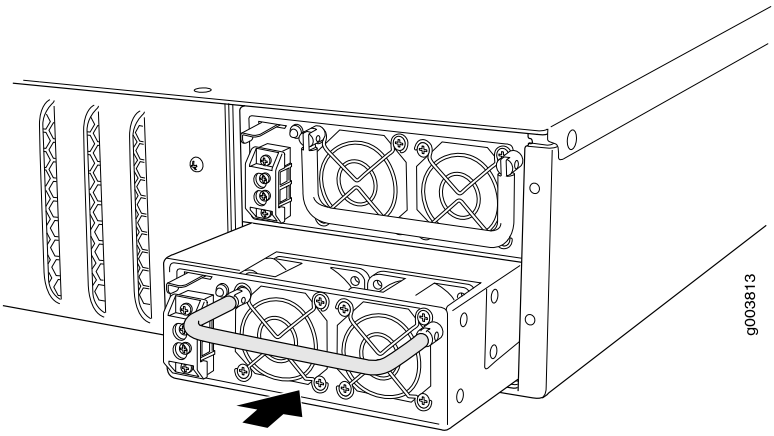

Replacing Crypto Accelerator Modules on J2320 and J2350 Routers

The Crypto Accelerator Module is a processor card that enhances performance of cryptographic algorithms used in IP security (IPSec) services. The Crypto Module is an optional feature on J2320 and J2350 Services Routers.

Figure 96 on page 202 shows the location of the Crypto Accelerator Module on J2320 and J2350 routers.

Figure 96: Crypto Accelerator Module Location on J2320 and J2350 Routers

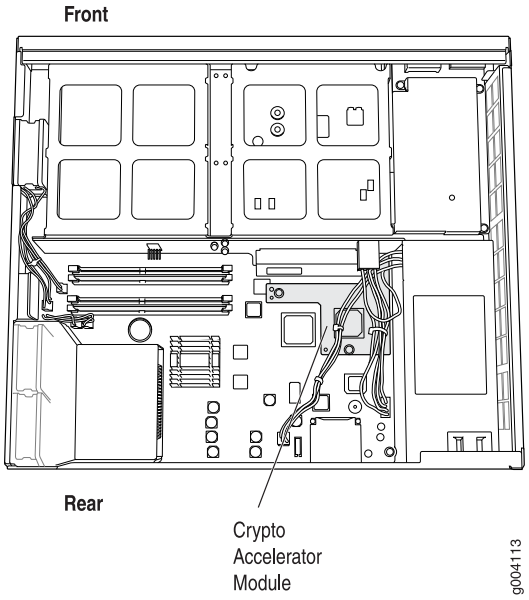

To remove or install a Crypto Accelerator Module, use the following procedures:

- Removing a J2320 or J2350 Crypto Accelerator Module on page 203
- Installing a J2320 or J2350 Crypto Accelerator Module on page 204

Removing a J2320 or J2350 Crypto Accelerator Module

NOTE: If you are installing a Crypto Accelerator Module into a J2320 or J2350 Services Router for the first time, proceed directly to "Installing a J2320 or J2350 Crypto Accelerator Module" on page 204.

To remove the Crypto Accelerator Module:

1. Place an electrostatic bag or antistatic mat on a flat stable surface to receive the Crypto Module.
2. Attach an electrostatic discharge (ESD) grounding strap to your bare wrist and connect the strap to the ESD point on the chassis, or to an outside ESD point if the router is disconnected from earth ground. For more information about ESD, see "Preventing Electrostatic Discharge Damage" on page 255.
3. Press and release the power button to power off the Services Router. Wait for the POWER LED to turn off.
4. Unplug the power cord or cable from the power source receptacle.
5. Remove the chassis cover. (See "Removing and Replacing the Chassis Cover on J2320 and J2350 Routers" on page 180.)
6. Locate the Crypto Module on the system board (see Figure 96 on page 202).
7. Using a Phillips screwdriver, remove the three screws from top of the Crypto Accerator Module, as shown in Figure 97 on page 203.

Figure 97: Removing a J2320 or J2350 Crypto Module

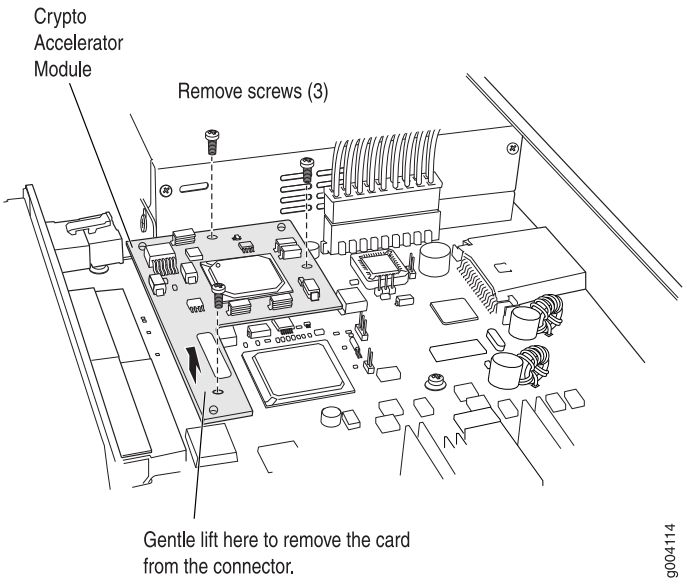

8. Gently lift the Crypto Module to disengage it from the connector on the system board, as shown in Figure 97 on page 203.
9. Place the Crypto Module on the antistatic mat or in the electrostatic bag.

Installing a J2320 or J2350 Crypto Accelerator Module

To install a Crypto Accelerator Module:

1. Take the following steps if you have not already done so:
   a. Attach an electrostatic discharge (ESD) grounding strap to your bare wrist and connect the strap to the ESD point on the chassis, or to an outside ESD point if the router is disconnected from earth ground. For more information about ESD, see "Preventing Electrostatic Discharge Damage" on page 255.
   b. Press and release the power button to power off the Services Router. Wait for the POWER LED to turn off.
   c. Unplug the power cord or cable from the power source receptacle.
   d. Remove the chassis cover. (See "Removing and Replacing the Chassis Cover on J2320 and J2350 Routers" on page 180.)
2. Locate the Crypto Module connector on the system board (see Figure 98 on page 204).
3. Remove the Crypto Module from its electrostatic bag.
4. Align the notches in the Crypto Module with the notches in the connector on the system board and push the Crypto Module down flat, as shown in Figure 98 on page 204.

Figure 98: Installing a J2320 or J2350 Crypto Accelerator Module

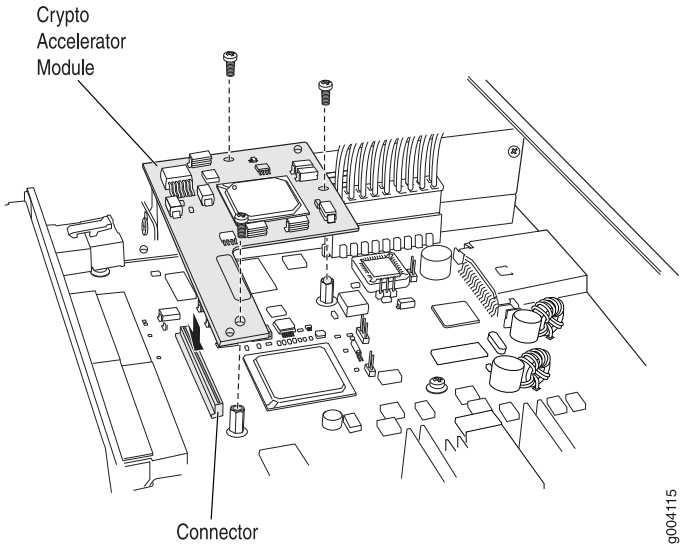

5. Insert the three screws and tighten them until snug. Do not overtighten.
6. Replace the chassis cover. (See "Removing and Replacing the Chassis Cover on J2320 and J2350 Routers" on page 180.)
7. Replace the power cord or cable.

8. Press and release the power button to power on the router. Verify that the POWER LED lights steadily.
9. Verify that the Crypto Module is correctly installed by issuing the show chassis hardware command, as shown in the following example:

```
user@host> show chassis hardware

user@host> show chassis hardware
Hardware inventory:
Item             Version  Part number  Serial number     Description
Chassis                                JN10B9C5AADD      J2320
Midplane         003A     710-017558   TV1567
System IO        0004     710-017562   TV2095            J23X0 System IO
Crypto Module                                           Crypto
Acceleration
Routing Engine   0003     710-017560   TV1962            RE-J2320-2000
FPC 0                                                   FPC
  PIC 0                                                 4x GE Base PIC
```

If Crypto Module appears in the output, the Crypto Accelerator Module is installed correctly.

Replacing Crypto Accelerator Modules on J4350 and J6350 Routers

The Crypto Accelerator Module is a processor card that enhances performance of cryptographic algorithms used in IP security (IPSec) services. The Crypto Module is a standard feature on J6350 Services Routers and an optional feature on the J4350 Services Routers.

Figure 99 on page 206 shows the location of the Crypto Accelerator Module.

Figure 99: Crypto Accelerator Module Location on J4350 and J6350 Routers

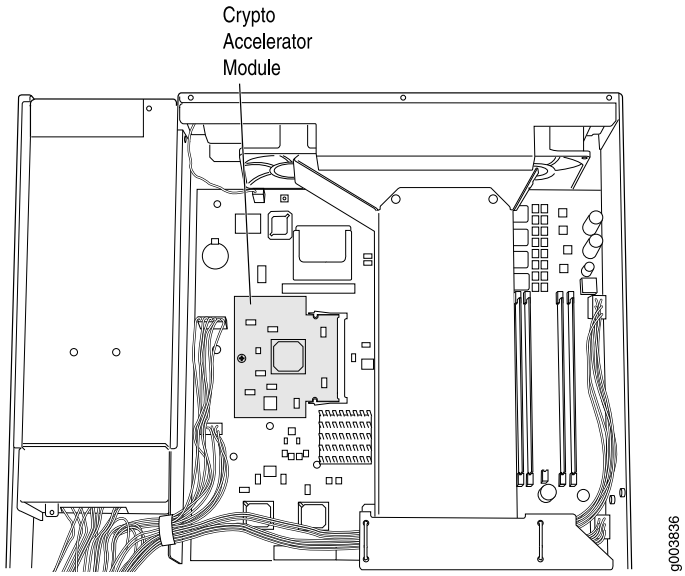

To modify a Crypto Accelerator Module configuration, use the following procedures:

- Removing a J4350 or J6350 Crypto Accelerator Module on page 206
- Installing a J4350 or j6350 Crypto Accelerator Module on page 207

Removing a J4350 or J6350 Crypto Accelerator Module

NOTE: If you are installing a Crypto Accelerator Module into a J4350 Services Router for the first time, proceed directly to "Installing a J4350 or j6350 Crypto Accelerator Module" on page 207.

To remove the Crypto Accelerator Module:

1. Place an electrostatic bag or antistatic mat on a flat stable surface to receive the Crypto Module.
2. Attach an electrostatic discharge (ESD) grounding strap to your bare wrist and connect the strap to the ESD point on the chassis, or to an outside ESD point if the router is disconnected from earth ground. For more information about ESD, see "Preventing Electrostatic Discharge Damage" on page 255.
3. Press and release the power button to power off the Services Router. Wait for the POWER LED to turn off.
4. Unplug the power cord or cable from the power source receptacle.
5. Remove the screws from the sides and the top of the chassis, and slide the cover off the chassis.

6. Locate the Crypto Module on the system board (see Figure 99 on page 206).
7. Using a Phillips screwdriver remove the screw, as shown in Figure 100 on page 207.

Figure 100: Removing a J4350 or J6350 Crypto Module Screw

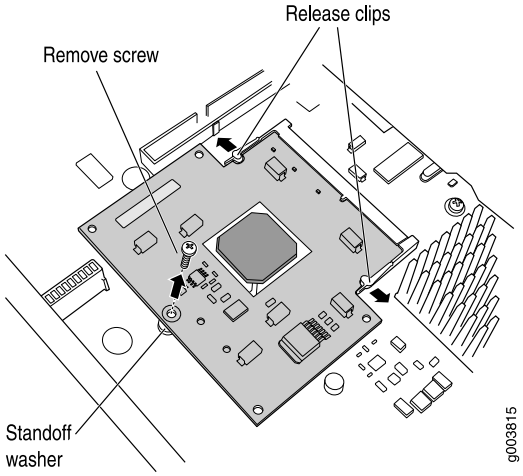

8. Pull the white release clips on either side of the Crypto Module out to either side, as shown in Figure 101 on page 207, to tilt the Crypto Module upward.

Figure 101: Removing and Installing a J4350 or J6350 Crypto Accelerator Module

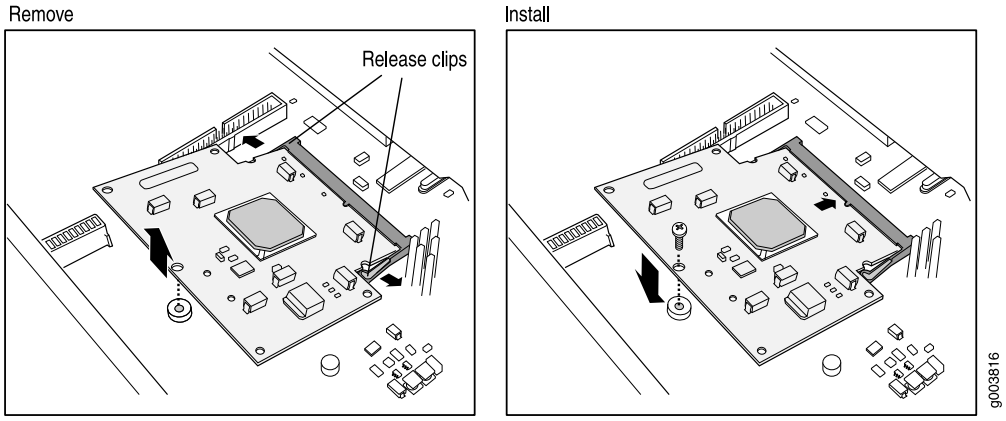

9. Slide the Crypto Module out of its socket.
10. Remove the standoff washer that was under the Crypto Module.
11. Place the Crypto Module on the antistatic mat or in the electrostatic bag.

Installing a J4350 or j6350 Crypto Accelerator Module

To install a Crypto Accelerator Module:

1. Take the following steps if you have not already done so:

a. Attach an electrostatic discharge (ESD) grounding strap to your bare wrist and connect the strap to the ESD point on the chassis, or to an outside ESD point if the router is disconnected from earth ground. For more information about ESD, see "Preventing Electrostatic Discharge Damage" on page 255.

b. Press and release the power button to power off the Services Router. Wait for the POWER LED to turn off.

c. Unplug the power cord or cable from the power source receptacle.

d. Remove the screws from the sides and the top of the chassis, and slide the cover off the chassis.

2. Locate the Crypto Module socket on the system board (see Figure 99 on page 206). The socket is tipped up at an angle when empty.
3. If a screw and standoff washer are already in place (see Figure 100 on page 207), remove them.
4. Remove the Crypto Module from its electrostatic bag and insert it into the socket.
5. Push the Crypto Module down flat against the main board until the release clips click into place, as shown in Figure 101 on page 207.
6. Insert the standoff washer under the Crypto Module.
7. Insert the screw and tighten it until snug. Do not overtighten.
8. Slide the cover onto the router, and replace and tighten the cover screws.
9. Replace the power cord or cable.
10. Press and release the power button to power on the router. Verify that the POWER LED lights steadily.
11. Verify that the Crypto Module is correctly installed by issuing the show chassis hardware command, as shown in the following example:

```
user@host> show chassis hardware

Hardware inventory:
Item             Version  Part number  Serial number     Description
Chassis                                JN1086A34ADA      J4350
Midplane         REV 00   710-014594
System IO        REV 00   710-012315                     JX350 System IO
Routing Engine   REV 00   710-012149                     RE-J4350-2540
Crypto Module                                           Crypto
acceleration
FPC 0                                                   FPC
  PIC 0                                                 4x GE Base PIC
```

If Crypto Module appears in the output, the Crypto Accelerator Module is installed correctly.

Replacing Air Filters on J2350 Routers

The cooling fans on J2350 routers draw air through vents along the left side of the chassis and exhaust it through vents on the right side of the chassis. For more information, see “J2320 and J2350 Cooling System” on page 25.

On J2350 routers that comply with Network Equipment Building System (NEBS) criteria, the air intake grid contains a filter. To verify that the system is a NEBS-compliant system, run the show chassis hardware command. A NEBS-compliant system displays the term *NEBS* in the output.

We recommend changing the filter every 6 months. However, the optimal filter replacement interval can vary depending on the environment where the router is located. If temperature alarms appear, inspect the air filter.

To replace the air filter:

1. Loosen the filter tray thumbscrew at the rear of the J2350 chassis.
2. Hold the screw firmly and pull it away from the chassis until you have pulled the attached filter tray out of the chassis (see Figure 102 on page 209).

Figure 102: Removing the Air Filter Tray

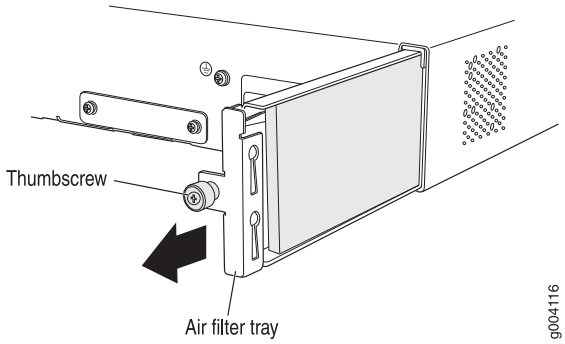

3. Hook-and-loop fasteners on the base of the filter tray hold the air filter inside the tray. Grasp the air filter with your fingers and gently pull it away from the filter tray.
4. Set the old air filter aside.
5. Place the new filter so that its edge aligns with the first hook-and-loop fastener as shown Figure 103 on page 210.

Figure 103: Placing the Air Filter on the Air Filter Tray

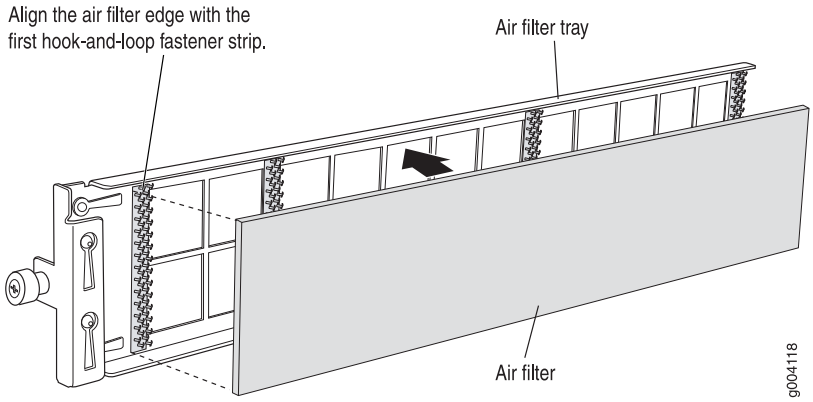

6. Press down on the filter until it is firmly seated against the bottom of the tray.
7. Hold the filter tray with the thumbscrew so that its sheet metal side faces the power supply fan exhaust. The air filter tray is designed to prevent it from being inserted incorrectly (see Figure 104 on page 210).

Figure 104: Inserting the Air Filter Tray on J2350 Routers

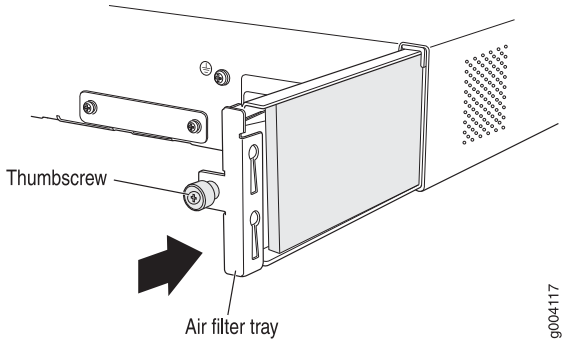

8. Slide the tray fully into the air filter opening.
9. Tighten the thumbscrew to the chassis.

Replacing Air Filters on J4350 and J6350 Routers

The front panel of J4350 and J6350 Services Routers contains an air intake grid with a protective cover and a filter, as shown in Figure 105 on page 211.

Figure 105: Attaching Air Filter and Filter Cover

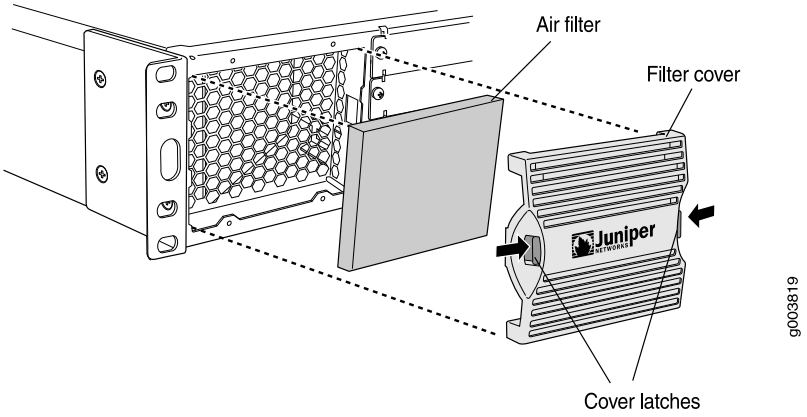

We recommend changing the filter every 6 months. However, the optimal filter replacement interval can vary depending on the environment where the router is located. If temperature alarms appear, inspect the air filter.

To replace the air filter:

1. Remove the filter cover by squeezing the plastic tabs on either side of the filter cover.
2. Pull the filter cover away from the chassis.
3. Remove the old filter.
4. Place the new filter in the opening.
5. Replace the filter cover by pressing it until it clicks into place.

Chapter 11

Troubleshooting Hardware Components

This chapter contains the following topics:

- Chassis Alarm Conditions on page 213
- Troubleshooting Power Management on page 214
- Contacting the Juniper Networks Technical Assistance Center on page 216

Chassis Alarm Conditions

You can monitor alarms to troubleshoot hardware problems on a Services Router. Alarms alert you to conditions on the router chassis, or in the system software that might prevent the router from operating normally. You can monitor active alarms from the J-Web interface or the CLI.

Services Router alarms warn you about conditions that can prevent the router from operating normally. Chassis and system alarm conditions are preset. When the Routing Engine detects an alarm condition, it lights the ALARM LED on the front panel. When the condition is corrected, the light turns off.

To view a more detailed description of the alarm cause, issue the show chassis alarms CLI command:

```
user@host> show chassis alarms
```

Table 70 on page 213 describes alarms that can occur for a chassis component such as the Routing Engine or a Physical Interface Module (PIM).

Table 70: Chassis Alarm Conditions and Corrective Actions

Component	Alarm Conditions	Corrective Action	Alarm Severity
Alternative boot media	The Services Router boots from an alternative boot device.	Typically, the router boots from the internal compact flash. If you configured your router to boot from an alternative boot device, ignore this alarm condition. If you did not configure the router to boot from an alternative boot device, contact JTAC. (See “Requesting Support” on page xxi.)	Yellow (minor)

Table 70: Chassis Alarm Conditions and Corrective Actions *(continued)*

Component	Alarm Conditions	Corrective Action	Alarm Severity
PIM	A PIM has failed. When a PIM fails, it attempts to reboot. If the Routing Engine detects that a PIM is rebooting too often, it shuts down the PIM.	Replace the failed PIM. (See "Replacing a PIM" on page 176.)	Red (major)
Routing Engine	An error occurred during the process of reading or writing compact flash.	Reformat the compact flash and install a bootable image. (See the *J-series Services Router Administration Guide*.) If this remedy fails, you must replace the failed Routing Engine. To contact JTAC, see "Requesting Support" on page xxi.	Yellow (minor)
	Routing Engine temperature is too warm.	■ Check the room temperature. (See "Router Environmental Tolerances" on page 108.) ■ Check the air flow. (See "General Site Guidelines" on page 105.) ■ Check the fans. (See "J2320 and J2350 Cooling System" on page 25 and "J4350 and J6350 Cooling System" on page 38.) If you must replace a fan or the Routing Engine, contact JTAC. (See "Requesting Support" on page xxi.) ■ Check the air filter and replace it if it appears clogged. (See "Replacing Air Filters on J2350 Routers" on page 209 and "Replacing Air Filters on J4350 and J6350 Routers" on page 210).	Yellow (minor)
	Routing Engine fan has failed.	Replace the failed fan. To contact JTAC, see "Requesting Support" on page xxi.	Red (major)

Troubleshooting Power Management

If one or more PIMs remain offline when you power on the chassis, the combination of PIMs installed might exceed the power and heat capacity of the chassis. For information about the maximum power and heat tokens permitted for each chassis, see "Planning for Power Management" on page 114.

To bring the PIM online:

1. Check if the PIM exceeds the power and heat tokens permitted by issuing the show chassis fpc and show chassis power-ratings CLI commands:

```
user@host> show chassis fpc

Temp  CPU Utilization (%)   Memory    Utilization (%)
Slot State           (C)  Total  Interrupt     DRAM (MB) Heap     Buffer

  0  Online        -------------------- CPU less FPC --------------------

  1  Online        -------------------- CPU less FPC --------------------

  2  Online        -------------------- CPU less FPC --------------------

  3  Empty
  4  Empty
  5  Offline        ------ Hardware exceeds High Power token limits ------
```

In this example, J-series power management has placed the PIM in slot 5 in an offline state to prevent damage. If brought online, the PIM would cause the combination of PIMs to exceed the maximum limit of 83 high-power tokens for the J2350 router.

```
user@host> show chassis power-ratings

Device     Low     High     Heat   Ratings
                  Power   Power
Total Tokens    83      83       83     -
FPC 1           6       27       21     OK
FPC 2           3       27       18     OK
FPC 3           3       27       18     OK
FPC 4           0       0        0      OK
FPC 5           2       27       2      Exceeded
Tokens Used     14      108      59     -
```



NOTE: In the show chassis power-ratings command output, the PIM slot number is reported as an FPC number.

The offline PIM is not powered off and continues to draw minimal power.

2. To bring the PIM online, you have the following options:

   - Remove one or more PIMs from the chassis. This option requires that you power off the router. For more information about removing PIMs, see “Removing a PIM” on page 176
   - Bring the PIM online without powering off the router. To do so, use the set chassis fpc offline command to set another PIM slot in the chassis to the offline state. For example:

```
user@host# set chassis fpc 2 offline
```

If the power and heat tokens no longer exceed the maximum, the PIMs that were placed offline by J-series power management are brought online automatically.

- Use the set chassis disable-power-management command to disable J-series power management:

```
user@host# set chassis disable-power-management
```



CAUTION: Use extreme caution when disabling J-series power management. To prevent equipment damage, do not install a combination of PIMs that exceeds the power or heat capacity of your router when J-series power management is disabled.

The set chassis disable-power-management command brings the offline PIMs online automatically.

To reenable J-series power management, remove the set chassis disable-power-management command from the configuration. For detailed information about the set chassis fpc offline and set chassis disable-power-management commands, see the *JUNOS System Basics Configuration Guide*.

Contacting the Juniper Networks Technical Assistance Center

If you need assistance while troubleshooting a Services Router, open a support case using the Case Manager link at http://www.juniper.net/support/, or call 1-888-314-JTAC (within the United States) or 1-408-745-9500 (from outside the United States). For more information, see “Contacting Customer Support and Returning Hardware” on page 217.

Chapter 12

Contacting Customer Support and Returning Hardware

This chapter describes how to return the Services Router or individual components to Juniper Networks for repair or replacement. It contains the following topics:

- Locating Component Serial Numbers on page 217
- Contacting Customer Support on page 220
- Return Procedure on page 221
- Packing a Router or Component for Shipment on page 222

Locating Component Serial Numbers

Before contacting Juniper Networks to request a Return Materials Authorization (RMA), you must find the serial number on the router or component. To list the router components and their serial numbers, enter the following command-line interface (CLI) command:

```
user@host> show chassis hardware
  Hardware inventory:
Item             Version  Part number  Serial number     Description
Chassis                                015810200500      J6350
Midplane         REV 00   710-012339
System IO        REV 00   710-012315                     JX350 System IO
Routing Engine   REV 00   710-012151      RE-J6350-3400
HW crypto                                                 Crypto accelerator
FPC 0                                                     FPC
  PIC 0                                                   4x GE Base
PIC
```



NOTE: In the show chassis hardware command, the PIM slot number is reported as an FPC number and the PIM number (always 0) is reported as the PIC number.

Most components also have a serial number ID label attached to the component body.

The following sections describe the label location on each type of component:

- J2320 and J2350 Chassis Serial Number and Agency Labels on page 218
- J4350 and J6350 Chassis Serial Number and Agency Labels on page 219
- PIM Serial Number Label on page 220
- Power Supply Serial Number Labels on page 220

J2320 and J2350 Chassis Serial Number and Agency Labels

J2320 and J2350 Services Routers have serial number ID labels located on the back of the chassis, as shown in Figure 106 on page 218, and an agency label on the bottom of the chassis, as shown in Figure 107 on page 219.

Figure 106: Location of the Serial Number ID Labels

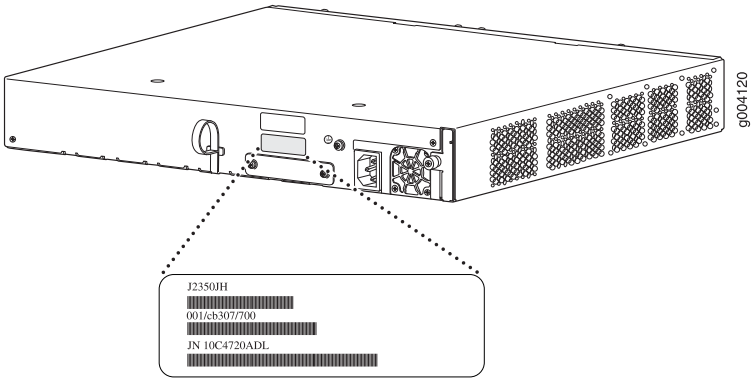

Figure 107: Location of the Agency Labels

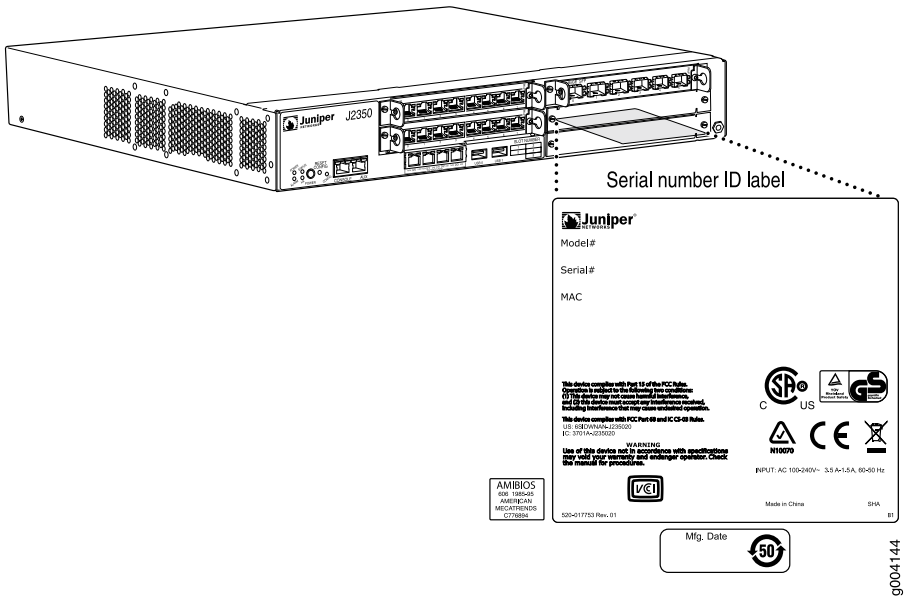

J4350 and J6350 Chassis Serial Number and Agency Labels

J4350 and J6350 Services Routers have serial number ID labels on the back of the chassis, as shown in Figure 108 on page 219, and an agency label on the bottom front corner, as shown in Figure 109 on page 220.

Figure 108: Location of Serial Number ID Labels

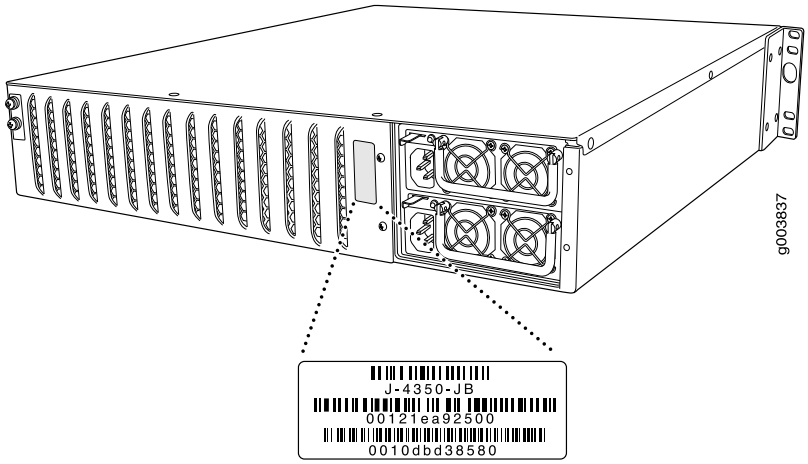

Figure 109: Location of the Agency Labels

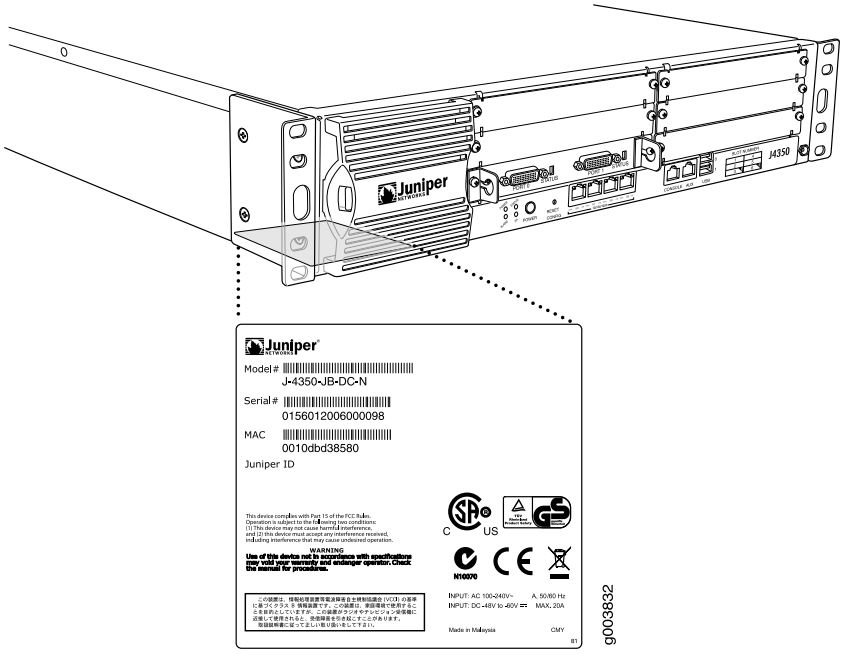

Serial ID label

PIM Serial Number Label

PIMs are field-replaceable. Each PIM has a unique serial number. The serial number label is located on the right side of the PIM, when the PIM is horizontally oriented (as it would be installed in the router). The exact location might be slightly different on different PIMs, depending on the placement of components on the PIM board.

Power Supply Serial Number Labels

The power supplies installed in the J6350 Services Router are field-replaceable. Each power supply has a unique serial number. The serial number label is located on the top of the power supply.

Contacting Customer Support

After you have located the serial numbers of the components you need to return, contact Juniper Networks Technical Assistance Center (JTAC) in one of the following ways.

You can contact JTAC 24 hours a day, seven days a week.

- On the Web, using the Case Manager link at http://www.juniper.net/support/
- By telephone:

  From the US and Canada: 1-888-314-JTAC

From all other locations: 1-408-745-9500

If contacting JTAC by telephone, enter your 11-digit case number followed by the pound (#) key if this is an existing case, or press the star (*) key to be routed to the next available support engineer.

Information You Might Need to Supply to JTAC

When requesting support from JTAC by telephone, be prepared to provide the following information:

- Your existing case number, if you have one
- Details of the failure or problem
- Type of activity being performed on the router when the problem occurred
- Configuration data displayed by one or more show commands

Return Procedure

If the problem cannot be resolved by the JTAC technician a Return Materials Authorization (RMA) number is issued. This number is used to track the returned material at the factory and to return repaired or new components to the customer as needed.



NOTE: Do not return any component to Juniper Networks unless you have first obtained an RMA number. Juniper Networks reserves the right to refuse shipments that do not have an RMA. Refused shipments are returned to the customer via collect freight.

For more information about return and repair policies, see the customer support Web page at http://www.juniper.net/support/guidelines.html.

For product problems or technical support issues, open a support case using the Case Manager link at http://www.juniper.net/support/, or call 1-888-314-JTAC (within the United States) or 1-408-745-9500 (outside the United States).

When you need to return a component:

1. Determine the part number and serial number of the component. For instructions, see “Locating Component Serial Numbers” on page 217.
2. Obtain an RMA number from JTAC.
3. Provide the following information:
   - Part number and serial number of component
   - Your name, organization name, telephone number, fax number, and shipping address
   - Description of the failure

The support representative validates your request and issues an RMA number for return of the component.

4. Pack the router or component for shipment, as described in "Packing a Router or Component for Shipment" on page 222.

Packing a Router or Component for Shipment

This section contains the following topics:

- Tools and Parts Required on page 222
- Packing the Services Router for Shipment on page 222
- Packing Components for Shipment on page 223

Tools and Parts Required

To remove components from the router or the router from a rack, you need the following tools and parts:

- Blank panels to cover empty slots
- Electrostatic bag or antistatic mat, for each component
- Electrostatic discharge (ESD) grounding wrist strap
- Flat-blade screwdriver, approximately 1/4 in. (6 mm)
- Phillips (+) screwdrivers, numbers 1 and 2

Packing the Services Router for Shipment

To pack the router for shipment, follow this procedure:

1. Retrieve the shipping carton and packing materials in which the router was originally shipped. If you do not have these materials, contact your Juniper Networks representative about approved packaging materials.
2. Attach an electrostatic discharge (ESD) grounding strap to your bare wrist and connect the strap to the ESD point on the chassis, or to an outside ESD point if the router is disconnected from earth ground. For more information about ESD, see "Preventing Electrostatic Discharge Damage" on page 255.
3. On the console or other management device connected to the master Routing Engine, enter CLI operational mode and issue the following command to shut down the router software.

```
user@host> request system halt
```

Wait until a message appears on the console confirming that the operating system has halted. For more information about the command, see the *J-series Services Router Administration Guide*.

4. Shut down power to the router by pressing the power button on the front panel of the router.
5. Disconnect power from the router. For instructions, see “Replacing AC Power Supply Cords” on page 195 and “Replacing DC Power Supply Cables” on page 198.
6. Remove the cables that connect to all external devices. For instructions, see “Removing PIM Cables” on page 179.
7. Remove all field-replaceable units (FRUs) from the router.
8. If the router is installed on a wall or rack, have one person support the weight of the router, while another person unscrews and removes the mounting screws.
9. Place the router in the shipping carton.
10. Cover the router with an ESD bag, and place the packing foam on top of and around the router.
11. Replace the accessory box on top of the packing foam.
12. Securely tape the box closed.
13. Write the RMA number on the exterior of the box to ensure proper tracking.

Packing Components for Shipment

To pack and ship individual components, follow these guidelines:

- When you return components, make sure they are adequately protected with packing materials and packed so that the pieces are prevented from moving around inside the carton.
- Use the original shipping materials if they are available.
- Place individual boards in electrostatic bags.
- Write the RMA number on the exterior of the box to ensure proper tracking.



CAUTION: Do not stack any of the router components.

Part 4
J-series Requirements and Specifications

- Network Cable Specifications and Connector Pinouts on page 227
- Safety and Regulatory Compliance Information on page 251

Chapter 13

Network Cable Specifications and Connector Pinouts

The network interfaces supported on the router accept different kinds of network cable.

- Serial PIM Cable Specifications on page 227
- Fast Ethernet RJ-45 Connector Pinout on page 237
- Gigabit Ethernet uPIM RJ-45 Connector Pinout on page 237
- Gigabit Ethernet ePIM RJ-45 Connector Pinout on page 238
- Chassis Console Port Pinouts on page 238
- E1 and T1 RJ-48 Cable Pinouts on page 239
- E3 and T3 BNC Connector Pinout on page 242
- ADSL and G.SHDSL RJ-11 Connector Pinout on page 242
- ISDN RJ-45 Connector Pinout on page 243
- Connector Pinouts for Avaya VoIP Modules on page 243

Serial PIM Cable Specifications

The 2-port serial PIM uses the cables and connectors summarized in Table 71 on page 227. Pinouts are detailed in Table 72 on page 228 through Table 81 on page 236.

Table 71: 2-Port Serial PIM Cables and Connectors

Name	Connector	Connector Hardware	End-to-End Conductors	Pinouts
RS-232 DTE	DB-25 male	4-40 threaded jackscrews	13	Table 72 on page 228
RS-232 DCE	DB-25 female	4-40 threaded jacknuts	13	Table 73 on page 229
RS-422/449 (EIA-449) DTE	DC-37 (DB-37) male	4-40 threaded jackscrews	25	Table 74 on page 229

Table 71: 2-Port Serial PIM Cables and Connectors *(continued)*

Name	Connector	Connector Hardware	End-to-End Conductors	Pinouts
RS-422/449 (EIA-449) DCE	DC-37 (DB-37) female	4-40 threaded jacknuts	25	Table 75 on page 231
EIA-530A DTE	DB-25 male	4-40 threaded jackscrews	23	Table 76 on page 232
EIA-530A DCE	DB-25 female	4-40 threaded jacknuts	22	Table 77 on page 233
V.35 DTE	M/34 male	Standard (Normally included with M/34 connector shell)	18	Table 78 on page 234
V.35 DCE	M/34 female	Standard (Normally included with M/34 connector shell)	18	Table 79 on page 235
X.21 DTE	DB-15 male	M3 threaded jackscrews	13	Table 80 on page 235
X.21 DCE	DB-15 female	M3 threaded jacknuts	13	Table 81 on page 236

RS-232 DTE Cable Pinout

Table 72: RS-232 DTE Cable Pinout

LFH-60 Pin	DB-25 Pin	LFH-60 Pairing	Description
15	1	–	Frame Ground
60	2	–	Transmit Data
1	3	–	Receive Data
48	4	–	Request to Send
37	5	–	Clear to Send
9	6	–	Data Set Ready
57	7	–	Signal Ground
13	8	–	Data Carrier Detect
56	15	–	Transmit Clock
5	17	–	Receive Clock
41	18	–	Local Loopback
33	20	–	Data Terminal Ready

Table 72: RS-232 DTE Cable Pinout *(continued)*

LFH-60 Pin	DB-25 Pin	LFH-60 Pairing	Description
52	24	–	Terminal Clock
22 to 21	–	–	–
18 to 17	–	–	–

RS-232 DCE Cable Pinout

Table 73: RS-232 DCE Cable Pinout

LFH-60 Pin	DB-25 Pin	LFH-60 Pairing	Description
15	1	–	Frame Ground
1	2	–	Transmit Data
60	3	–	Receive Data
37	4	–	Request to Send
48	5	–	Clear to Send
33	6	–	Data Set Ready
57	7	–	Signal Ground
13	8	–	Data Carrier Detect
56	15	–	Transmit Clock
52	17	–	Receive Clock
45	18	–	Local Loopback
9	20	–	Data Terminal Ready
5	24	–	Terminal Clock
22 to 21	–	–	–

RS-422/449 (EIA-449) DTE Cable Pinout

Table 74: RS-422/449 (EIA-449) DTE Cable Pinout

LFH-60 Pin	DC-37 (DB-37) Pin	LFH-60 Pairing	Description
15	1	–	Shield Ground

Table 74: RS-422/449 (EIA-449) DTE Cable Pinout *(continued)*

LFH-60 Pin	DC-37 (DB-37) Pin	LFH-60 Pairing	Description
60	4	59	Send Data (A)
56	5	55	Send Timing (A)
1	6	2	Receive Data (A)
48	7	47	Request to Send (A)
5	8	6	Receive Timing (A)
37	9	38	Clear to Send (A)
41	10	–	Local Loopback
9	11	10	Data Mode (A)
33	12	34	Terminal Ready (A)
13	13	14	Receive Ready (A)
52	17	51	Terminal Timing (A)
36	19	–	Signal Ground
4	20	–	Receive Common
59	22	60	Send Data (B)
55	23	56	Send Timing (B)
2	24	1	Receive Data (B)
47	25	48	Request to Send (B)
6	26	5	Receive Timing (B)
38	27	37	Clear to Send (B)
10	29	9	Data Mode (B)
34	30	33	Terminal Ready (B)
14	31	13	Receiver Ready (B)
51	35	52	Terminal Timing (B)
57	37	–	Send Common
26 to 25	–	–	–
18 to 17	–	–	–

RS-422/449 (EIA-449) DCE Cable Pinout

Table 75: RS-422/449 (EIA-449) DCE Cable Pinout

LFH-60 Pin	DC-37 (DB-37) Pin	LFH-60 Pairing	Description
15	1	–	Shield Ground
1	4	2	Send Data (A)
56	5	55	Send Timing (A)
60	6	59	Receive Data (A)
37	7	38	Request to Send (A)
52	8	51	Receive Timing (A)
48	9	47	Clear to Send (A)
45	10	–	Local Loopback
33	11	34	Data Mode (A)
9	12	10	Terminal Ready (A)
13	13	14	Receive Ready (A)
5	17	6	Terminal Timing (A)
36	19	–	Signal Ground
4	20	–	Receive Common
2	22	1	Send Data (B)
55	23	56	Send Timing (B)
59	24	60	Receive Data (B)
38	25	37	Request to Send (B)
51	26	52	Receive Timing (B)
47	27	48	Clear to Send (B)
34	29	33	Data Mode (B)
10	30	9	Terminal Ready (B)
14	31	13	Receiver Ready (B)
6	35	5	Terminal Timing (B)
57	37	–	Send Common
26 to 25	–	–	–

EIA-530A DTE Cable Pinout

Table 76: EIA-530A DTE Cable Pinout

LFH-60 Pin	DB-25 Pin	LFH-60 Pairing	Description
15	1	–	Shield Ground
60	2	59	Transmit Data (A)
1	3	2	Receive Data (A)
48	4	47	Request to Send (A)
37	5	38	Clear to Send (A)
9	6	–	Data Set Ready (A)
57	7	–	Signal Ground
13	8	14	Received Line Signal Detector (A)
6	9	5	Receive Clock (B)
14	10	13	Received Line Signal Detector (B)
51	11	52	Terminal Timing (B)
55	12	56	Transmit Clock (B)
38	13	37	Clear to Send (B)
59	14	60	Transmit Data (B)
56	15	55	Transmit Clock (A)
2	16	1	Receive Data (B)
5	17	6	Receive Clock (A)
41	18	–	Local Loopback
47	19	48	Request to Send (B)
33	20	–	Data Terminal Ready (A)
4	23	–	Signal Ground
52	24	51	Terminal Timing (A)
26 to 25	–	–	–
30 to 29	–	–	–
18 to 17	–	–	–

EIA-530A DCE Cable Pinout

Table 77: EIA-530A DCE Cable Pinout

LFH-60 Pin	DB-25 Pin	LFH-60 Pairing	Description
15	1	–	Shield Ground
1	2	2	Transmit Data (A)
60	3	59	Receive Data (A)
37	4	38	Request to Send (A)
48	5	47	Clear to Send (A)
33	6	–	Data Set Ready (A)
57	7	–	Signal Ground
13	8	14	Received Line Signal Detector (A)
51	9	52	Receive Clock (B)
14	10	13	Received Line Signal Detector (B)
6	11	5	Terminal Timing (B)
55	12	56	Transmit Clock (B)
47	13	48	Clear to Send (B)
2	14	1	Transmit Data (B)
56	15	55	Transmit Clock (A)
59	16	60	Receive Data (B)
52	17	51	Receive Clock (A)
45	18	–	Local Loopback
38	19	37	Request to Send (B)
9	20	–	Data Terminal Ready (A)
4	23	–	Signal Ground
5	24	6	Terminal Timing (A)
26 to 25	–	–	–
30 to 29	–	–	–

V.35 DTE Cable Pinout

Table 78: V.35 DTE Cable Pinout

LFH-60 Pin	M/34 Pin	LFH-60 Pairing	Description
15	A	–	Frame Ground
57	B	–	Signal Ground
48	C	–	Request to Send
37	D	–	Clear to Send
9	E	–	Data Set Ready
13	F	–	Received Line Signal Detector
33	H	–	Data Terminal Ready
41	K	–	Test Mode
60	P	59	Transmit Data (A)
1	R	2	Receive Data (A)
59	S	60	Transmit Data (B)
2	T	1	Receive Data (B)
52	U	51	Terminal Timing (A)
5	V	6	Receive Timing (A)
51	W	52	Terminal Timing (B)
6	X	5	Receive Timing (B)
56	Y	55	Transmit Timing (A)
55	AA	56	Transmit Timing (B)
22 to 21	–	–	–
26 to 25	–	–	–
18 to 17	–	–	–

V.35 DCE Cable Pinout

Table 79: V.35 DCE Cable Pinout

LFH-60 Pin	M/34 Pin	LFH-60 Pairing	Description
15	A	–	Frame Ground
57	B	–	Signal Ground
37	C	–	Request to Send
48	D	–	Clear to Send
33	E	–	Data Set Ready
13	F	–	Received Line Signal Detector
9	H	–	Data Terminal Ready
45	K	–	Test Mode
1	P	2	Transmit Data (A)
60	R	59	Receive Data (A)
2	S	1	Transmit Data (B)
59	T	60	Receive Data (B)
5	U	6	Terminal Timing (A)
52	V	51	Receive Timing (A)
6	W	5	Terminal Timing (B)
51	X	52	Receive Timing (B)
56	Y	55	Transmit Timing (A)
55	AA	56	Transmit Timing (B)
22 to 21	–	–	–
26 to 25	–	–	–

X.21 DTE Cable Pinout

Table 80: X.21 DTE Cable Pinout

LFH-60 Pin	DB-15 Pin	LFH-60 Pairing	Description
15	1	–	Shield Ground

Table 80: X.21 DTE Cable Pinout *(continued)*

LFH-60 Pin	DB-15 Pin	LFH-60 Pairing	Description
60	2	59	Transmit Data (A)
48	3	47	Control (A)
1	4	2	Receive (A)
37	5	38	Indicate (A)
5	6	6	Signal Element Timing (A)
57	8	–	Signal Ground
59	9	60	Transmit Data (B)
47	10	48	Control (B)
2	11	1	Receive (B)
38	12	37	Indicate (B)
6	13	5	Signal Element Timing (B)
30 to 29	–	–	–
18 to 17	–	–	–

X.21 DCE Cable Pinout

Table 81: X.21 DCE Cable Pinout

LFH-60 Pin	DB-15 Pin	LFH-60 Pairing	Description
15	1	–	Shield Ground
1	2	2	Transmit Data (A)
37	3	38	Control (A)
60	4	59	Receive (A)
48	5	47	Indicate (A)
52	6	51	Signal Element Timing (A)
57	8	–	Signal Ground
2	9	1	Transmit Data (B)
38	10	37	Control (B)
59	11	60	Receive (B)

Table 81: X.21 DCE Cable Pinout *(continued)*

LFH-60 Pin	DB-15 Pin	LFH-60 Pairing	Description
47	12	48	Indicate (B)
51	13	52	Signal Element Timing (B)
30 to 29	–	–	–

Fast Ethernet RJ-45 Connector Pinout

Table 82 on page 237 describes the Fast Ethernet RJ-45 connector pinout information.



NOTE: Either a straight-through or cross-over cable can be used to connect to the interface.

Table 82: Fast Ethernet RJ-45 Connector Pinout

Pin	Signal
1	TX +
2	TX-
3	RX +
4	Termination network
5	Termination network
6	RX-
7	Termination network
8	Termination network

Gigabit Ethernet uPIM RJ-45 Connector Pinout

Table 83 on page 237 describes connector pinout information for 8-port and 16-port Gigabit Ethernet uPIM ports.

Table 83: Gigabit Ethernet uPIM RJ-45 Connector Pinout

Pin	Signal Name	Function
1	BI_DA +	Bidirectional pair + A
2	BI_DA-	Bidirectional pair -A

Table 83: Gigabit Ethernet uPIM RJ-45 Connector Pinout *(continued)*

Pin	Signal Name	Function
3	BI_DB +	Bidirectional pair + B
4	BI_DC +	Bidirectional pair + C
5	BI_DC-	Bidirectional pair -C
6	BI_DB-	Bidirectional pair -B
7	BI_DD +	Bidirectional pair + D
8	BI_DD-	Bidirectional pair -D

Gigabit Ethernet ePIM RJ-45 Connector Pinout

Table 84 on page 238 describes connector pinout information for 1-port Gigabit Ethernet ePIM ports.

Table 84: Gigabit Ethernet ePIM RJ-45 Connector Pinouts

Pin	Signal
1	MDI0 +
2	MDI0-
3	MDI1 +
4	MDI2 +
5	MDI2-
6	MDI1-
7	MDI3 +
8	MDI3-

Chassis Console Port Pinouts

The console port on a J-series Services Router chassis has an RJ-45 connector. Table 85 on page 239 provides RJ-45 chassis console connector pinout information. An RJ-45 cable is supplied with the router.

To connect the console port to an external management device, you need an RJ-45 to DB-9 serial port adapter, which is also supplied with the router.

Table 85: RJ-45 Chassis Console Connector Pinout

Pin	Signal	Description
1	RTS Output	Request to Send
2	DTR Output	Data Terminal Ready
3	TxD Output	Transmit Data
4	GND	Chassis Ground
5	GND	Chassis Ground
6	RxD Input	Receive Data
7	DSR Input	Data Set Ready
8	CTS Input	Clear to Send

Table 86 on page 239 describes the DB-9 connector pinouts.

Table 86: DB-9 Console Connector Pinout

Pin	Signal	Direction	Description
1	DCD	<–	Carrier Detect
2	RxD	<–	Receive Data
3	TxD	–>	Transmit Data
4	DTR	–>	Data Terminal Ready
5	Ground	—	Signal Ground
6	DSR	<–	Data Set Ready
7	RTS	–>	Request To Send
8	CTS	<–	Clear To Send
9	RING	<–	Ring Indicator

E1 and T1 RJ-48 Cable Pinouts

The E1 and T1 PIMs use an RJ-48 cable, which is not supplied with the PIM.



CAUTION: To maintain agency approvals, use only a properly constructed, shielded cable.

Table 87 on page 240 through Table 90 on page 241 describe the RJ-48 connector pinouts.

Table 87: RJ-48 Connector to RJ-48 Connector (Straight) Pinout

RJ-48 Pin (on T1/E1 PIM) (Data Numbering Form)	RJ-48 Pin (Data Numbering Form)	Signal
1	1	RX, Ring, –
2	2	RX, Tip, +
4	4	TX, Ring, –
5	5	TX, Tip, +
3	3	Shield/Return/Ground
6	6	Shield/Return/Ground
7	No connect	No connect
8	No connect	No connect

Table 88: RJ-48 Connector to RJ-48 Connector (Crossover) Pinout

RJ-48 Pin (on T1/E1 PIM) (Data Numbering Form)	RJ-48 Pin (Data Numbering Form)	Signal
1	4	RX/Ring/– < –– > TX/Ring/–
2	5	RX/Tip/+ < –– > TX/Tip/+
4	1	TX/Ring/– < –– > RX/Ring/–
5	2	TX/Tip/+ < –– > RX/Tip/+
3	3	Shield/Return/Ground
6	6	Shield/Return/Ground
7	No connect	No connect
8	No connect	No connect

Table 89: RJ-48 Connector to DB-15 Connector (Straight) Pinout

RJ-48 Pin (on T1/E1 PIM) (Data Numbering Form)	DB-15 Pin (Data Numbering Form)	Signal
1	11	RX/Ring/– <––> RX/Ring/–
2	3	RX/Tip/+ <––> RX/Tip/+
4	9	TX/Ring/– <––> TX/Ring/–
5	1	TX/Tip/+ <––> TX/Tip/+
3	4	Shield/Return/Ground
6	2	Shield/Return/Ground
7	No connect	No connect
8	No connect	No connect
9	No connect	No connect
10	No connect	No connect
11	No connect	No connect
12	No connect	No connect
13	No connect	No connect
14	No connect	No connect
15	No connect	No connect

Table 90: RJ-48 Connector to DB-15 Connector (Crossover) Pinout

RJ-48 Pin (on T1/E1 PIM) (Data Numbering Form)	DB-15 Pin (Data Numbering Form)	Signal
1	9	RX/Ring/– <––> TX/Ring/–
2	1	RX/Tip/+ <––> TX/Tip/+
4	11	TX/Ring/– <––> RX/Ring/–
5	3	TX/Tip/+ <––> RX/Tip/+
3	4	Shield/Return/Ground
6	2	Shield/Return/Ground

Table 90: RJ-48 Connector to DB-15 Connector (Crossover) Pinout *(continued)*

RJ-48 Pin (on T1/E1 PIM) (Data Numbering Form)	DB-15 Pin (Data Numbering Form)	Signal
7	No connect	No connect
8	No connect	No connect
9	No connect	No connect
10	No connect	No connect
11	No connect	No connect
12	No connect	No connect
13	No connect	No connect
14	No connect	No connect
15	No connect	No connect

E3 and T3 BNC Connector Pinout

The E3 and T3 PIMs each use two BNC connectors—one for transmitting data (TX) and one for receiving data (RX).

ADSL and G.SHDSL RJ-11 Connector Pinout

The 1-port ADSL 2/2+ Annex A and Annex B PIMs use an RJ-11 cable, which is not supplied with the PIMs. The 2-port G.SHDSL Annex A and Annex B PIM also uses an RJ-11 cable, which is not supplied with the PIM. Table 91 on page 242 describes the RJ-11 connector pinout.

Table 91: ADSL and G.SHDSL RJ-11 Connector Pinout

Pin	Signal
1	No connect
2	No connect
3	RJ P –Tip
4	RJ N –Ring
5	No connect
6	No connect

ISDN RJ-45 Connector Pinout

The 1-port and 4-port ISDN PIMs use an RJ-45 cable, which is not supplied with the PIMs. Table 92 on page 243 describes the RJ-45 connector pinout.

Table 92: ISDN RJ-45 Connector Pinout

Pin	Signal
1	No connect
2	No connect
3	RJ_SX_P
4	RJ_SR_P
5	RJ_SR_N
6	RJ_SX_N
7	No connect
8	No connect
9	Shielded
10	Shielded 2

Connector Pinouts for Avaya VoIP Modules

The Avaya VoIP modules supported on the Services Router accept different kinds of network cables.

- TGM550 Console Port Pinouts on page 244
- TGM550 RJ-11 Connector Pinout for Analog Ports on page 244
- TIM508 Connector Pinout on page 245
- TIM510 RJ-45 Connector Pinout on page 245
- TIM514 Connector Pinout on page 246
- TIM516 Connector Pinout on page 246
- TIM518 Connector Pinout on page 248
- TIM521 Connector Pinout on page 249

TGM550 Console Port Pinouts

The console port on a TGM550 Telephony Gateway Module has an RJ-45 connector. Table 93 on page 244 provides TGM550 RJ-45 console connector pinout information. An RJ-45 cable is supplied with the TGM550.



NOTE: Two different RJ-45 cables and RJ-45 to DB-9 adapters are provided. Do not use the RJ-45 cable and adapter for the Services Router console port to connect to the TGM550 console port.

To connect the console port to an external management device, you need an RJ-45 to DB-9 serial port adapter, which is also supplied with the TGM550.

Table 93: TGM550 RJ-45 Console Connector Pinouts

TGM550 RJ-45 Pin	Signal	Terminal DB-9 Pins
1	For future use	NC
2	TXD (TGM550 input)	3
3	RXD (TGM550 output)	2
4	CD	4
5	GND	5
6	DTR	1
7	RTS	8
8	CTS	7

TGM550 RJ-11 Connector Pinout for Analog Ports

The two analog telephone ports and two analog trunk ports on the TGM550 use an RJ-11 cable. Table 94 on page 244 describes the TGM550 RJ-11 connector pinout.

Table 94: TGM550 RJ-11 Connector Pinout

Pin	Signal
1	No connection
2	No connection
3	Ring
4	Tip

Table 94: TGM550 RJ-11 Connector Pinout *(continued)*

Pin	Signal
5	No connection
6	No connection

TIM508 Connector Pinout

The TIM508 Analog Telephony Interface Module uses a B25A unshielded 25–pair amphenol cable. Table 95 on page 245 describes the TIM508 connector pinout.

Table 95: TIM508 Connector Pinout

Pin	Signal
1	Tip
2	Tip
3	Tip
4	Tip
5	Tip
6	Tip
7	Tip
8	Tip
26	R - Receive
27	Ring
28	Ring
29	Ring
30	Ring
31	Ring
32	Ring
33	Ring

TIM510 RJ-45 Connector Pinout

The TIM510 Telephony Interface Module uses an RJ-45 cable. Table 96 on page 246 describes the TIM510 RJ-45 connector pinout.

Table 96: TIM510 RJ-45 Connector Pinout

Pin	Signal
1	Ring
2	Tip
3	No connection
4	R1 - Transmit
5	T1 - Transmit
6	No connection
7	No connection
8	No connection

TIM514 Connector Pinout

The TIM514 Telephony Interface Module uses an RJ-11 cable. Table 97 on page 246 describes the TIM514 RJ-11 connector pinout information.

Table 97: TIM514 RJ-11 Connector Pinout

Pin	Signal
1	No connection
2	No connection
3	Ring
4	Tip
5	No connection
6	No connection

TIM516 Connector Pinout

The TIM516 Analog Telephony Interface Module uses a B25A unshielded 25–pair amphenol cable. Table 98 on page 246 describes the TIM516 connector pinout.

Table 98: TIM516 Connector Pinout

Pin	Signal
1	Tip

Table 98: TIM516 Connector Pinout *(continued)*

Pin	Signal
2	Tip
3	Tip
4	Tip
5	Tip
6	Tip
7	Tip
8	Tip
17	Tip
18	Tip
19	Tip
20	Tip
21	Tip
22	Tip
23	Tip
24	Tip
26	Ring
27	Ring
28	Ring
29	Ring
30	Ring
31	Ring
32	Ring
33	Ring
42	Ring
43	Ring
44	Ring
45	Ring

Table 98: TIM516 Connector Pinout *(continued)*

Pin	Signal
46	Ring
47	Ring
48	Ring
49	Ring

TIM518 Connector Pinout

The TIM518 Analog Telephony Interface Module uses a B25A unshielded 25–pair amphenol cable. Table 99 on page 248 describes the TIM518 connector pinout.

Table 99: TIM518 Connector Pinout

Pin	Signal
1	Ring
2	Ring
3	Ring
4	Ring
5	Ring
6	Ring
7	Ring
8	Ring
17	Ring
18	Ring
19	Ring
20	Ring
21	Ring
22	Ring
23	Ring
24	Ring
26	Tip

Table 99: TIM518 Connector Pinout *(continued)*

Pin	Signal
27	Tip
28	Tip
29	Tip
30	Tip
31	Tip
32	Tip
33	
42	Tip
43	Tip
44	
45	Tip
46	Tip
47	Tip
48	Tip
49	Tip

TIM521 Connector Pinout

The TIM521 Telephony Interface Module uses an RJ-45 cable. Table 100 on page 249 describes the TIM521 RJ-45 connector pinout.

Table 100: TIM521 RJ-45 Connector Pinout

Pin	Signal
1	No connection
2	No connection
3	Transmit pair +
4	Receive pair +
5	Receive pair –
6	Transmit pair –

Table 100: TIM521 RJ-45 Connector Pinout *(continued)*

Pin	Signal
7	No connection
8	No connection

Chapter 14

Safety and Regulatory Compliance Information

To install and use the Services Router safely, follow proper safety procedures. This chapter discusses the following safety and regulatory compliance information:

- Definition of Safety Warning Levels on page 251
- Safety Guidelines and Warnings on page 253
- Agency Approvals on page 287
- Compliance Statements for Environmental Requirements on page 288
- Compliance Statements for NEBS on page 288
- Compliance Statements for EMC Requirements on page 288

Definition of Safety Warning Levels

This manual uses the following three levels of safety warnings:



NOTE: You might find this information helpful in a particular situation, or might otherwise overlook it.



CAUTION: You need to observe the specified guidelines to avoid minor injury or discomfort to you, or severe damage to the Services Router.



WARNING: This symbol means danger. You are in a situation that could cause bodily injury. Before you work on any equipment, be aware of the hazards involved with electrical circuitry and be familiar with standard practices for preventing accidents.



WARNING: Waarschuwing Dit waarschuwingssymbool betekent gevaar. U verkeert in een situatie die lichamelijk letsel kan veroorzaken. Voordat u aan enige apparatuur gaat werken, dient u zich bewust te zijn van de bij elektrische schakelingen betrokken

risico's en dient u op de hoogte te zijn van standaard maatregelen om ongelukken te voorkomen.



WARNING: Varoitus Tämä varoitusmerkki merkitsee vaaraa. Olet tilanteessa, joka voi johtaa ruumiinvammaan. Ennen kuin työskentelet minkään laitteiston parissa, ota selvää sähkökytkentöihin liittyvistä vaaroista ja tavanomaisista onnettomuuksien ehkäisykeinoista.



WARNING: Attention Ce symbole d'avertissement indique un danger. Vous vous trouvez dans une situation pouvant causer des blessures ou des dommages corporels. Avant de travailler sur un équipement, soyez conscient des dangers posés par les circuits électriques et familiarisez-vous avec les procédures couramment utilisées pour éviter les accidents.



WARNING: Warnung Dieses Warnsymbol bedeutet Gefahr. Sie befinden sich in einer Situation, die zu einer Körperverletzung führen könnte. Bevor Sie mit der Arbeit an irgendeinem Gerät beginnen, seien Sie sich der mit elektrischen Stromkreisen verbundenen Gefahren und der Standardpraktiken zur Vermeidung von Unfällen bewußt.



WARNING: Avvertenza Questo simbolo di avvertenza indica un pericolo. La situazione potrebbe causare infortuni alle persone. Prima di lavorare su qualsiasi apparecchiatura, occorre conoscere i pericoli relativi ai circuiti elettrici ed essere al corrente delle pratiche standard per la prevenzione di incidenti.



WARNING: Advarsel Dette varselsymbolet betyr fare. Du befinner deg i en situasjon som kan føre til personskade. Før du utfører arbeid på utstyr, må du vare oppmerksom på de faremomentene som elektriske kretser innebærer, samt gjøre deg kjent med vanlig praksis når det gjelder å unngå ulykker.



WARNING: Aviso Este símbolo de aviso indica perigo. Encontra-se numa situação que lhe poderá causar danos físicos. Antes de começar a trabalhar com qualquer equipamento, familiarize-se com os perigos relacionados com circuitos eléctricos, e com quaisquer práticas comuns que possam prevenir possíveis acidentes.



WARNING: ¡Atención! Este símbolo de aviso significa peligro. Existe riesgo para su integridad física. Antes de manipular cualquier equipo, considerar los riesgos que

entraña la corriente eléctrica y familiarizarse con los procedimientos estándar de prevención de accidentes.



WARNING: Varning! Denna varningssymbol signalerar fara. Du befinner dig i en situation som kan leda till personskada. Innan du utför arbete på någon utrustning måste du vara medveten om farorna med elkretsar och känna till vanligt förfarande för att förebygga skador.

Safety Guidelines and Warnings

This section lists the following safety guidelines and warnings for installing, operating, and maintaining a Services Router:

- General Safety Guidelines and Warnings on page 253
- Electrical Safety Guidelines and Warnings on page 256
- Installation Safety Guidelines and Warnings on page 270
- Laser and LED Safety Guidelines and Warnings on page 276
- Maintenance and Operational Safety Guidelines and Warnings on page 280

General Safety Guidelines and Warnings

The following guidelines help ensure your safety and protect the Services Router from damage. The list of guidelines might not address all potentially hazardous situations in your working environment, so be alert and exercise good judgment at all times.

- Perform only the procedures explicitly described in this manual. Make sure that only authorized service personnel perform other system services.
- Keep the area around the chassis clear and free from dust before, during, and after installation.
- Keep tools away from areas where people could trip over them while walking.
- Do not wear loose clothing or jewelry, such as rings, bracelets, or chains, which could become caught in the chassis.
- Wear safety glasses if you are working under any conditions that could be hazardous to your eyes.
- Do not perform any actions that create a potential hazard to people or make the equipment unsafe.
- Never attempt to lift an object that is too heavy for one person to handle.
- Never install or manipulate wiring during electrical storms.
- Never install electrical jacks in wet locations unless the jacks are specifically designed for wet environments.
- Operate the Services Router only when it is properly grounded.
- The separate protective earthing terminal provided on this product shall be permanently connected to earth.
- Replace fuses only with fuses of the same type and rating.
- Do not open or remove chassis covers or sheet metal parts unless instructions are provided in this manual. Such an action could cause severe electrical shock.
- Do not push or force any objects through any opening in the chassis frame. Such an action could result in electrical shock or fire.
- Avoid spilling liquid onto the Services Router chassis or onto any Services Router component. Such an action could cause electrical shock or damage the Services Router.
- Avoid touching uninsulated electrical wires or terminals that have not been disconnected from their power source. Such an action could cause electrical shock.

In addition, observe the warnings and guidelines in the following sections.

Qualified Personnel Warning



WARNING: Only trained and qualified personnel should install or replace the Services Router.

Waarschuwing Installatie en reparaties mogen uitsluitend door getraind en bevoegd personeel uitgevoerd worden.

Varoitus Ainoastaan koulutettu ja pätevä henkilökunta saa asentaa tai vaihtaa tämän laitteen.

Attention Tout installation ou remplacement de l'appareil doit être réalisé par du personnel qualifié et compétent.

Warnung Gerät nur von geschultem, qualifiziertem Personal installieren oder auswechseln lassen.



WARNING: Avvertenza Solo personale addestrato e qualificato deve essere autorizzato ad installare o sostituire questo apparecchio.

Advarsel Kun kvalifisert personell med riktig opplæring bør montere eller bytte ut dette utstyret.

Aviso Este equipamento deverá ser instalado ou substituído apenas por pessoal devidamente treinado e qualificado.

¡Atención! Estos equipos deben ser instalados y reemplazados exclusivamente por personal técnico adecuadamente preparado y capacitado.

Varning! Denna utrustning ska endast installeras och bytas ut av utbildad och kvalificerad personal.

Preventing Electrostatic Discharge Damage

Many Services Router hardware components are sensitive to damage from static electricity. Some components can be impaired by voltages as low as 30 V. You can easily generate potentially damaging static voltages whenever you handle plastic or foam packing material or if you move components across plastic or carpets. Observe the following guidelines to minimize the potential for electrostatic discharge (ESD) damage, which can cause intermittent or complete component failures:

- Always use an ESD wrist strap or ankle strap, and make sure that it is in direct contact with your skin.



CAUTION: For safety, periodically check the resistance value of the ESD strap. The measurement should be in the range of 1 to 10 Mohms.

- When handling any component that is removed from the chassis, make sure the equipment end of your ESD strap is attached to one of the electrostatic discharge points on the chassis, which are shown in Figure 1 on page 14, Figure 2 on page 15 and Figure 13 on page 28.
- Avoid contact between the component and your clothing. ESD voltages emitted from clothing can still damage components.
- When removing or installing a component, always place it component-side up on an antistatic surface, in an antistatic card rack, or in an electrostatic bag (see Figure 110 on page 256). If you are returning a component, place it in an electrostatic bag before packing it.

Figure 110: Place a Component into an Electrostatic Bag

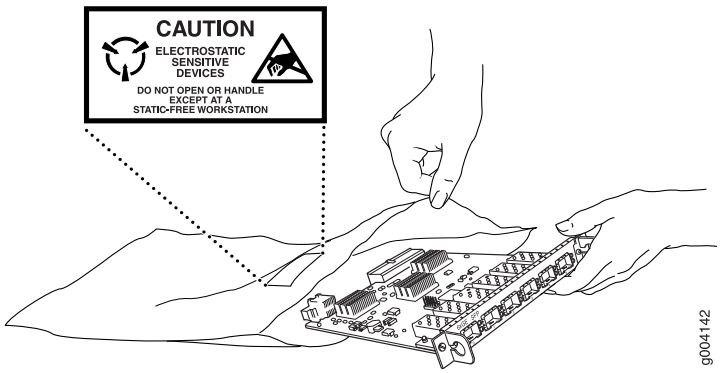

Electrical Safety Guidelines and Warnings

When working on equipment powered by electricity, follow the guidelines described in the following sections:

- General Electrical Safety Guidelines on page 256
- AC Power Electrical Safety Guidelines on page 258
- DC Power Electrical Safety Guidelines on page 259
- Power Sources for Redundant Power Supplies on page 260
- DC Power Disconnection Warning on page 260
- DC Power Grounding Requirements and Warning on page 261
- DC Power Wiring Sequence Warning on page 262
- DC Power Wiring Terminations Warning on page 264
- Grounded Equipment Warning on page 265
- Warning Statement for Norway and Sweden on page 266
- In Case of Electrical Accident on page 266
- Multiple Power Supplies Disconnection Warning on page 266
- Power Disconnection Warning on page 267
- TN Power Warning on page 268
- Telecommunication Line Cord Warning on page 269

General Electrical Safety Guidelines

WARNING: Certain ports on the router are designed for use as intrabuilding (within-the-building) interfaces only (Type 2 or Type 4 ports as described in GR-1089-CORE, Issue 4) and require isolation from the exposed outside plant (OSP)

cabling. To comply with NEBS requirements and protect against lightening surges and commercial power disturbances, the intrabuilding ports *must not* be metallically connected to interfaces that connect to the OSP or its wiring. The intrabuilding ports on the router are suitable for connection to intrabuilding or unexposed wiring or cabling only. The addition of primary protectors is not sufficient protection for connecting these interfaces metallically to OSP wiring.



CAUTION: To comply with intrabuilding lightning and surge requirements, intrabuilding wiring must be shielded, and the shield for the wiring must be grounded at both ends.



CAUTION: Before removing or installing components of a router, attach an ESD strap to an ESD point and place the other end of the strap around your bare wrist. Failure to use an ESD strap could result in damage to the router.

- Install the Services Router in compliance with the following local, national, or international electrical codes:
  - United States—National Fire Protection Association (NFPA 70), United States National Electrical Code.
  - Canada—Canadian Electrical Code, Part 1, CSA C22.1.
  - Other countries—International Electromechanical Commission (IEC) 60364, Part 1 through Part 7.
  - Evaluated to the TN power system.
- Locate the emergency power-off switch for the room in which you are working so that if an electrical accident occurs, you can quickly turn off the power.
- Make sure that grounding surfaces are cleaned and brought to a bright finish before grounding connections can be made.
- Do not work alone if potentially hazardous conditions exist anywhere in your workspace.
- Never assume that power is disconnected from a circuit. Always check the circuit before starting to work.
- Carefully look for possible hazards in your work area, such as moist floors, ungrounded power extension cords, and missing safety grounds.
- Operate the Services Router within marked electrical ratings and product usage instructions.
- For the Services Router and peripheral equipment to function safely and correctly, use the cables and connectors specified for the attached peripheral equipment, and make certain they are in good condition.

Many Services Router components can be removed and replaced without powering down or disconnecting power to the Services Router, as detailed in elsewhere in this manual. Never install equipment if it appears damaged.

AC Power Electrical Safety Guidelines



CAUTION: For routers with AC power supplies, an external surge protective device (SPD) must be used at the AC power source.

The following electrical safety guidelines apply to AC-powered routers:

- AC-powered routers are shipped with a three-wire electrical cord with a grounding-type plug that fits only a grounding-type power outlet. Do not circumvent this safety feature. Equipment grounding should comply with local and national electrical codes.
- You must provide an external Listed circuit breaker rated minimum 15 A in the building installation.
- The power cord serves as the main disconnecting device. The socket outlet must be near the router and be easily accessible.
- The cores in the mains lead are colored in accordance with the following code (within the United States):
  - Green and yellow—Earth
  - Blue—Neutral
  - Brown—Live
- When a router is equipped with two AC power supplies, both power cords (one for each power supply) must be unplugged to completely disconnect power to the router.
- Note the following warnings printed on the AC power supply faceplate:
  - To completely de-energize the system disconnect maximum of 2 power cordsets.
  - Apparaten skall anslutas till jordat uttag när den ansluts till ett nätverk. [Swedish]

Power Cable Warning (Japanese)



WARNING: The attached power cable is only for this product. Do not use the cable for another product.

注意

附属の電源コードセットはこの製品専用です。
他の電気機器には使用しないでください。

g017253

DC Power Electrical Safety Guidelines

The following electrical safety guidelines apply to a DC-powered router:

- A DC-powered router is equipped with a DC terminal block that is rated for the power requirements of a maximally configured router. To supply sufficient power, terminate the DC input wiring on a facility DC source capable of supplying at least 8 A @ –48 VDC. Incorporate an easily accessible disconnect device into the facility wiring. Be sure to connect the ground wire or conduit to a solid office (earth) ground. A closed loop ring is recommended for terminating the ground conductor at the ground stud.
- In the United States, a restricted access area is one in accordance with Articles 110-16, 110-17, and 110-18 of the National Electrical Code ANSI/NFPA 70.



NOTE: Primary overcurrent protection is provided by the building circuit breaker. This breaker should protect against excess currents, short circuits, and earth faults in accordance with NEC ANSI/NFPA70.

- Ensure that the polarity of the DC input wiring is correct. Under certain conditions, connections with reversed polarity might trip the primary circuit breaker or damage the equipment.
- For personal safety, connect the green and yellow wire to safety (earth) ground at both the router and the supply side of the DC wiring.
- The marked input voltage of –48 VDC for a DC-powered router is the nominal voltage associated with the battery circuit, and any higher voltages are only to be associated with float voltages for the charging function.
- Because the router is a positive ground system, you must connect the positive lead to the terminal labeled RTN, the negative lead to the terminal labeled –48 VDC, and the earth ground to the chassis grounding points.

Power Sources for Redundant Power Supplies

If your J6350 Services Router includes an optional redundant DC power supply, make sure that the two DC power supplies are powered by dedicated power feeds derived from feed A and feed B. This configuration provides the commonly deployed A/B feed redundancy for the system. Failure to do so makes the router susceptible to total power failure if one of the power supplies fails.

冗余电源

如果 Juniper Networks 设备包含一个可选的冗余电源　请将两个电源连接到不同的输入电源。不这样做的结果是 Juniper Networks 设备一路供电出问题时导致全部的电源故障

DC Power Disconnection Warning



WARNING: Before performing any of the following procedures, ensure that power is removed from the DC circuit. To ensure that all power is off, locate the circuit breaker on the panel board that services the DC circuit, switch the circuit breaker to the OFF position, and tape the switch handle of the circuit breaker in the OFF position.

Waarschuwing Voordat u een van de onderstaande procedures uitvoert, dient u te controleren of de stroom naar het gelijkstroom circuit uitgeschakeld is. Om u ervan te verzekeren dat alle stroom UIT is geschakeld, kiest u op het schakelbord de stroomverbreker die het gelijkstroom circuit bedient, draait de stroomverbreker naar de UIT positie en plakt de schakelaarhendel van de stroomverbreker met plakband in de UIT positie vast.

Varoitus Varmista, että tasavirtapiirissä ei ole virtaa ennen seuraavien toimenpiteiden suorittamista. Varmistaaksesi, että virta on KATKAISTU täysin, paikanna tasavirrasta huolehtivassa kojetaulussa sijaitseva suojakytkin, käännä suojakytkin KATKAISTU-asentoon ja teippaa suojakytkimen varsi niin, että se pysyy KATKAISTU-asennossa.



WARNING: Attention Avant de pratiquer l'une quelconque des procédures ci-dessous, vérifier que le circuit en courant continu n'est plus sous tension. Pour en être sûr, localiser le disjoncteur situé sur le panneau de service du circuit en courant continu, placer le disjoncteur en position fermée (OFF) et, à l'aide d'un ruban adhésif, bloquer la poignée du disjoncteur en position OFF.

Warnung Vor Ausführung der folgenden Vorgänge ist sicherzustellen, daß die Gleichstromschaltung keinen Strom erhält. Um sicherzustellen, daß sämtlicher Strom abgestellt ist, machen Sie auf der Schalttafel den Unterbrecher für die Gleichstromschaltung ausfindig, stellen Sie den Unterbrecher auf AUS, und kleben Sie den Schaltergriff des Unterbrechers mit Klebeband in der AUS-Stellung fest.

Avvertenza Prima di svolgere una qualsiasi delle procedure seguenti, verificare che il circuito CC non sia alimentato. Per verificare che tutta l'alimentazione sia scollegata

(OFF), individuare l'interruttore automatico sul quadro strumenti che alimenta il circuito CC, mettere l'interruttore in posizione OFF e fissarlo con nastro adesivo in tale posizione.



WARNING: Advarsel Før noen av disse prosedyrene utføres, kontroller at strømmen er frakoblet likestrømkretsen. Sørg for at all strøm er slått AV. Dette gjøres ved å lokalisere strømbryteren på brytertavlen som betjener likestrømkretsen, slå strømbryteren AV og teipe bryterhåndtaket på strømbryteren i AV-stilling.

Aviso Antes de executar um dos seguintes procedimentos, certifique-se que desligou a fonte de alimentação de energia do circuito de corrente contínua. Para se assegurar que toda a corrente foi DESLIGADA, localize o disjuntor no painel que serve o circuito de corrente contínua e coloque-o na posição OFF (Desligado), segurando nessa posição a manivela do interruptor do disjuntor com fita isoladora.

¡Atención! Antes de proceder con los siguientes pasos, comprobar que la alimentación del circuito de corriente continua (CC) esté cortada (OFF). Para asegurarse de que toda la alimentación esté cortada (OFF), localizar el interruptor automático en el panel que alimenta al circuito de corriente continua, cambiar el interruptor automático a la posición de Apagado (OFF), y sujetar con cinta la palanca del interruptor automático en posición de Apagado (OFF).

Varning! Innan du utför någon av följande procedurer måste du kontrollera att strömförsörjningen till likströmskretsen är bruten. Kontrollera att all strömförsörjning är BRUTEN genom att slå AV det överspänningsskydd som skyddar likströmskretsen och tejpa fast överspänningsskyddets omkopplare i FRÅN-läget.

DC Power Grounding Requirements and Warning

An insulated grounding conductor that is identical in size to the grounded and ungrounded branch circuit supply conductors, but is identifiable by green and yellow stripes, is installed as part of the branch circuit that supplies the unit. The grounding conductor must be permanently connected to earth.

For further information, see “Chassis Grounding” on page 125 and “DC Power, Connection, and Power Cable Specifications” on page 113.



WARNING: When installing the router, the ground connection must always be made first and disconnected last.

Waarschuwing Bij de installatie van het toestel moet de aardverbinding altijd het eerste worden gemaakt en het laatste worden losgemaakt.

Varoitus Laitetta asennettaessa on maahan yhdistäminen aina tehtävä ensiksi ja maadoituksen irti kytkeminen viimeiseksi.

Attention Lors de l'installation de l'appareil, la mise à la terre doit toujours être connectée en premier et déconnectée en dernier.

Warnung Der Erdanschluß muß bei der Installation der Einheit immer zuerst hergestellt und zuletzt abgetrennt werden.

Avvertenza In fase di installazione dell'unità, eseguire sempre per primo il collegamento a massa e disconnetterlo per ultimo.

Advarsel Når enheten installeres, må jordledningen alltid tilkobles først og frakobles sist.

Aviso Ao instalar a unidade, a ligação à terra deverá ser sempre a primeira a ser ligada, e a última a ser desligada.

¡Atención! Al instalar el equipo, conectar la tierra la primera y desconectarla la última.

Varning! Vid installation av enheten måste jordledningen alltid anslutas först och kopplas bort sist.

DC Power Wiring Sequence Warning



WARNING: Wire the DC power supply using the appropriate lugs. When connecting power, the proper wiring sequence is ground to ground, + RTN to + RTN, then -48 V to -48 V. When disconnecting power, the proper wiring sequence is -48 V to -48 V, + RTN to + RTN, then ground to ground. Note that the ground wire should always be connected first and disconnected last.



WARNING: Waarschuwing De juiste bedradingsvolgorde verbonden is aarde naar aarde, + RTN naar + RTN, en –48 V naar – 48 V. De juiste bedradingsvolgorde losgemaakt is en –48 V naar – 48 V, + RTN naar + RTN, aarde naar aarde.



WARNING: Varoitus Oikea yhdistettava kytkentajarjestys on maajohto maajohtoon, + RTN varten + RTN, –48 V varten – 48 V. Oikea irrotettava kytkentajarjestys on –48 V varten – 48 V, + RTN varten + RTN, maajohto maajohtoon.



WARNING: Attention Câblez l'approvisionnement d'alimentation CC En utilisant les crochets appropriés à l'extrémité de câblage. En reliant la puissance, l'ordre approprié de câblage est rectifié pour rectifier, + RTN à + RTN, puis -48 V à -48 V. En débranchant la puissance, l'ordre approprié de câblage est -48 V à -48 V, + RTN à + RTN, a alors rectifié pour rectifier. Notez que le fil de masse devrait toujours être relié d'abord et débranché pour la dernière fois. Notez que le fil de masse devrait toujours être relié d'abord et débranché pour la dernière fois.



WARNING: Warnung Verdrahten Sie die Gleichstrom-Versorgung mit den passenden Ansätzen am Verdrahtung Ende. Wenn man Energie anschließt, wird die korrekte Verdrahtung. Reihenfolge gerieben, um, + RTN zu + RTN, dann -48 V bis -48 V zu reiben. Wenn sie Energie trennt, ist die korrekte Verdrahtung Reihenfolge -48 V bis -48 V, + RTN zu + RTN, rieb dann, um zu reiben. Beachten Sie, daß der Erdungsdraht immer zuerst angeschlossen werden und zuletzt getrennt werden sollte.



WARNING: Avvertenza Mostra la morsettiera dell alimentatore CC. Cablare l'alimentatore CC usando i connettori adatti all'estremità del cablaggio, come illustrato. La corretta sequenza di cablaggio è da massa a massa, da positivo a positivo (da linea ad L) e da negativo a negativo (da neutro a N). Tenere presente che il filo di massa deve sempre venire collegato per primo e scollegato per ultimo.



WARNING: Advarsel Riktig tilkoples tilkoplingssekvens er jord til jord, + RTN til + RTN, –48 V til – 48 V. Riktig frakoples tilkoplingssekvens er –48 V til – 48 V, + RTN til + RTN, jord til jord.



WARNING: Aviso Ate con alambre la fuente de potencia cc Usando los terminales apropiados en el extremo del cableado. Al conectar potencia, la secuencia apropiada del cableado se muele para moler, + RTN a + RTN, entonces -48 V a -48 V. Al desconectar potencia, la secuencia apropiada del cableado es -48 V a -48 V, + RTN a + RTN, entonces molió para moler. Observe que el alambre de tierra se debe conectar siempre primero y desconectar por último. Observe que el alambre de tierra se debe conectar siempre primero y desconectar por último.



WARNING: ¡Atención! Wire a fonte de alimentação de DC Usando os talões apropriados na extremidade da fiação. Ao conectar a potência, a seqüência apropriada da fiação é moída para moer, + RTN a + RTN, então -48 V a -48 V. Ao desconectar a potência, a seqüência apropriada da fiação é -48 V a -48 V, + RTN a + RTN, moeu então para moer. Anote que o fio à terra deve sempre ser conectado primeiramente e desconectado por último. Anote que o fio à terra deve sempre ser conectado primeiramente e desconectado por último.

Varning! Korrekt kopplingssekvens ar jord till jord, + RTN till + RTN, –48 V till – 48 V. Korrekt kopplas kopplingssekvens ar –48 V till – 48 V, + RTN till + RTN, jord till jord.

DC Power Wiring Terminations Warning



WARNING: When stranded wiring is required, use approved wiring terminations, such as closed-loop or spade-type with upturned lugs. These terminations should be the appropriate size for the wires and should clamp both the insulation and conductor.



WARNING: Waarschuwing Wanneer geslagen bedrading vereist is, dient u bedrading te gebruiken die voorzien is van goedgekeurde aansluitingspunten, zoals het gesloten-lus type of het grijperschop type waarbij de aansluitpunten omhoog wijzen. Deze aansluitpunten dienen de juiste maat voor de draden te hebben en dienen zowel de isolatie als de geleider vast te klemmen.



WARNING: Varoitus Jos säikeellinen johdin on tarpeen, käytä hyväksyttyä johdinliitäntää, esimerkiksi suljettua silmukkaa tai kourumaista liitäntää, jossa on ylöspäin käännetyt kiinnityskorvat. Tällaisten liitäntöjen tulee olla kooltaan johtimiin sopivia ja niiden tulee puristaa yhteen sekä eristeen että johdinosan.



WARNING: Attention Quand des fils torsadés sont nécessaires, utiliser des douilles terminales homologuées telles que celles à circuit fermé ou du type à plage ouverte avec cosses rebroussées. Ces douilles terminales doivent être de la taille qui convient aux fils et doivent être refermées sur la gaine isolante et sur le conducteur.



WARNING: Warnung Wenn Litzenverdrahtung erforderlich ist, sind zugelassene Verdrahtungsabschlüsse, z.B. für einen geschlossenen Regelkreis oder gabelförmig, mit nach oben gerichteten Kabelschuhen zu verwenden. Diese Abschlüsse sollten die angemessene Größe für die Drähte haben und sowohl die Isolierung als auch den Leiter festklemmen.



WARNING: Avvertenza Quando occorre usare trecce, usare connettori omologati, come quelli a occhiello o a forcella con linguette rivolte verso l'alto. I connettori devono avere la misura adatta per il cablaggio e devono serrare sia l'isolante che il conduttore.



WARNING: Advarsel Hvis det er nødvendig med flertrådede ledninger, brukes godkjente ledningsavslutninger, som for eksempel lukket sløyfe eller spadetype med oppoverbøyde kabelsko. Disse avslutningene skal ha riktig størrelse i forhold til ledningene, og skal klemme sammen både isolasjonen og lederen.



WARNING: Aviso Quando forem requeridas montagens de instalação eléctrica de cabo torcido, use terminações de cabo aprovadas, tais como, terminações de cabo em circuito fechado e planas com terminais de orelha voltados para cima. Estas terminações de cabo deverão ser do tamanho apropriado para os respectivos cabos, e deverão prender simultaneamente o isolamento e o fio condutor.



WARNING: ¡Atención! Cuando se necesite hilo trenzado, utilizar terminales para cables homologados, tales como las de tipo "bucle cerrado" o "espada", con las lengüetas de conexión vueltas hacia arriba. Estos terminales deberán ser del tamaño apropiado para los cables que se utilicen, y tendrán que sujetar tanto el aislante como el conductor.



WARNING: Varning! När flertrådiga ledningar krävs måste godkända ledningskontakter användas, t.ex. kabelsko av sluten eller öppen typ med uppåtvänd tapp. Storleken på dessa kontakter måste vara avpassad till ledningarna och måste kunna hålla både isoleringen och ledaren fastklämda.

Grounded Equipment Warning



WARNING: The router is intended to be grounded. Ensure that the router is connected to earth ground during normal use.

Waarschuwing Deze apparatuur hoort geaard te worden Zorg dat de host-computer tijdens normaal gebruik met aarde is verbonden.

Varoitus Tämä laitteisto on tarkoitettu maadoitettavaksi. Varmista, että isäntälaite on yhdistetty maahan normaalikäytön aikana.

Attention Cet équipement doit être relié à la terre. S'assurer que l'appareil hôte est relié à la terre lors de l'utilisation normale.

Warnung Dieses Gerät muß geerdet werden. Stellen Sie sicher, daß das Host-Gerät während des normalen Betriebs an Erde gelegt ist.



WARNING: Avvertenza Questa apparecchiatura deve essere collegata a massa. Accertarsi che il dispositivo host sia collegato alla massa di terra durante il normale utilizzo.

Advarsel Dette utstyret skal jordes. Forviss deg om vertsterminalen er jordet ved normalt bruk.

Aviso Este equipamento deverá estar ligado à terra. Certifique-se que o host se encontra ligado à terra durante a sua utilização normal.

¡Atención! Este equipo debe conectarse a tierra. Asegurarse de que el equipo principal esté conectado a tierra durante el uso normal.

Varning! Denna utrustning är avsedd att jordas. Se till att värdenheten är jordad vid normal användning.

Warning Statement for Norway and Sweden



WARNING: The equipment must be connected to an earthed mains socket-outlet.

Advarsel Apparatet skal kobles til en jordet stikkontakt.

Varning! Apparaten skall anslutas till jordat nätuttag.

In Case of Electrical Accident

If an electrical accident results in an injury, take the following actions in this order:

1. Use caution. Be aware of potentially hazardous conditions that could cause further injury.
2. Disconnect power from the Services Router.
3. If possible, send another person to get medical aid. Otherwise, assess the condition of the victim, then call for help.

Multiple Power Supplies Disconnection Warning



WARNING: The J6350 Services Router has more than one power supply connection. All connections must be removed completely to remove power from the unit completely.



WARNING: Waarschuwing Deze J6350 eenheid heeft meer dan één stroomtoevoerverbinding; alle verbindingen moeten volledig worden verwijderd om de stroom van deze eenheid volledig te verwijderen.



WARNING: Varoitus Tässä laitteessa on useampia virtalähdekytkentöjä. Kaikki kytkennät on irrotettava kokonaan, jotta virta poistettaisiin täysin laitteesta.



WARNING: Attention Cette J6350 unité est équipée de plusieurs raccordements d'alimentation. Pour supprimer tout courant électrique de l'unité, tous les cordons d'alimentation doivent être débranchés.



WARNING: Warnung Diese J6350 Einheit verfügt über mehr als einen Stromanschluß; um Strom gänzlich von der Einheit fernzuhalten, müssen alle Stromzufuhren abgetrennt sein.



WARNING: Avvertenza Questa J6350 unità ha più di una connessione per alimentatore elettrico; tutte le connessioni devono essere completamente rimosse per togliere l'elettricità dall'unità.



WARNING: Advarsel Denne J6350 enheten har mer enn én strømtilkobling. Alle tilkoblinger må kobles helt fra for å eliminere strøm fra enheten.



WARNING: Aviso Este J6350 dispositivo possui mais do que uma conexão de fonte de alimentação de energia; para poder remover a fonte de alimentação de energia, deverão ser desconectadas todas as conexões existentes.



WARNING: ¡Atención! Esta J6350 unidad tiene más de una conexión de suministros de alimentación; para eliminar la alimentación por completo, deben desconectarse completamente todas las conexiones.



WARNING: Varning! Denna J6350 enhet har mer än en strömförsörjningsanslutning; alla anslutningar måste vara helt avlägsnade innan strömtillförseln till enheten är fullständigt bruten.

Power Disconnection Warning



WARNING: Before working on the router or near power supplies, unplug the power cord from an AC router.



WARNING: Waarschuwing Voordat u aan een frame of in de nabijheid van voedingen werkt, dient u bij wisselstroom toestellen de stekker van het netsnoer uit het stopcontact te halen.



WARNING: Varoitus Kytke irti vaihtovirtalaitteiden virtajohto, ennen kuin teet mitään asennuspohjalle tai työskentelet virtalähteiden läheisyydessä.



WARNING: Attention Avant de travailler sur un châssis ou à proximité d'une alimentation électrique, débrancher le cordon d'alimentation des unités en courant alternatif.



WARNING: Warnung Bevor Sie an einem Chassis oder in der Nähe von Netzgeräten arbeiten, ziehen Sie bei Wechselstromeinheiten das Netzkabel ab bzw.



WARNING: Avvertenza Prima di lavorare su un telaio o intorno ad alimentatori, scollegare il cavo di alimentazione sulle unità CA.



WARNING: Advarsel Før det utføres arbeid på kabinettet eller det arbeides i nærheten av strømforsyningsenheter, skal strømledningen trekkes ut på vekselstrømsenheter.



WARNING: Aviso Antes de trabalhar num chassis, ou antes de trabalhar perto de unidades de fornecimento de energia, desligue o cabo de alimentação nas unidades de corrente alternada.



WARNING: ¡Atención! Antes de manipular el chasis de un equipo o trabajar cerca de una fuente de alimentación, desenchufar el cable de alimentación en los equipos de corriente alterna (CA).



WARNING: Varning! Innan du arbetar med ett chassi eller nära strömförsörjningsenheter skall du för växelströmsenheter dra ur nätsladden.

TN Power Warning



WARNING: The router is designed to work with a TN power system.



WARNING: Waarschuwing Het apparaat is ontworpen om te functioneren met TN energiesystemen.



WARNING: Varoitus Koje on suunniteltu toimimaan TN-sähkövoimajärjestelmien yhteydessä.



WARNING: Attention Ce dispositif a été conçu pour fonctionner avec des systèmes d'alimentation TN.



WARNING: Warnung Das Gerät ist für die Verwendung mit TN-Stromsystemen ausgelegt.



WARNING: Avvertenza Il dispositivo è stato progettato per l'uso con sistemi di alimentazione TN.



WARNING: Advarsel Utstyret er utfomet til bruk med TN-strømsystemer.



WARNING: Aviso O dispositivo foi criado para operar com sistemas de corrente TN.



WARNING: ¡Atención! El equipo está diseñado para trabajar con sistemas de alimentación tipo TN.



WARNING: Varning! Enheten är konstruerad för användning tillsammans med elkraftssystem av TN-typ.

Telecommunication Line Cord Warning



WARNING: To reduce the risk of fire, use only No. 26 AWG or larger UL-listed or CSA-certified telecommunication line cord.



WARNING: Waarschuwing Om brandgevaar te reduceren, dient slechts telecommunicatielijnsnoer nr. 26 AWG of groter gebruikt te worden.



WARNING: Varoitus Tulipalovaaran vähentämiseksi käytä ainoastaan nro 26 AWG- tai paksumpaa tietoliikennejohdinta.



WARNING: Attention Pour réduire les risques d'incendie, n'utiliser que des cordons de lignes de télécommunications de type AWG n° 26 ou plus larges.



WARNING: Warnung Zur Reduzierung der Feuergefahr eine Fernmeldeleitungsschnur der Größe 26 AWG oder größer verwenden.



WARNING: Avvertenza Per ridurre il rischio di incendio, usare solo un cavo per linea di telecomunicazioni di sezione 0,12 mm2 (26 AWG) o maggiore.



WARNING: Advarsel Bruk kun AWG nr. 26 eller telekommunikasjonsledninger med større dimensjon for å redusere faren for brann.



WARNING: Aviso Para reduzir o risco de incêndio, utilize apenas terminais de fio de telecomunicações Nº. 26 AWG ou superiores.



WARNING: ¡Atención! Para reducir el riesgo de incendios, usar sólo líneas de telecomunicaciones de calibre No. 26 AWG o más gruesas.



WARNING: Varning! För att minska brandrisken skall endast Nr. 26 AWG eller större telekommunikationsledning användas.

Installation Safety Guidelines and Warnings

Observe the following guidelines and warnings before and during Services Router installation:

- Chassis Lifting Guidelines on page 271
- Installation Instructions Warning on page 271
- Rack-Mounting Requirements and Warnings on page 272
- Ramp Warning on page 276

Chassis Lifting Guidelines

The weight of a fully populated chassis is approximately 15.9 lbs (7.2 kg) for a J2320 Services Router, 18.2 lbs (8.3 kg) for a J2350 Services Router, 25.3 lbs (11.5 kg) for a J4350 Services Router, and 30.7 lb (13.9 kg) for a J6350 Services Router. Observe the following guidelines for lifting and moving a Services Router:

- Before moving the Services Router, read the guidelines in "Preparing for Router Installation" on page 105 to verify that the intended site meets the specified power, environmental, and clearance requirements.
- Before lifting or moving the Services Router, disconnect all external cables.
- As when lifting any heavy object, lift most of the weight with your legs rather than your back. Keep your knees bent and your back relatively straight and avoid twisting your body as you lift. Balance the load evenly and be sure that your footing is solid.

Installation Instructions Warning



WARNING: Read the installation instructions before you connect the router to a power source.

Waarschuwing Raadpleeg de installatie-aanwijzingen voordat u het systeem met de voeding verbindt.

Varoitus Lue asennusohjeet ennen järjestelmän yhdistämistä virtalähteeseen.

Attention Avant de brancher le système sur la source d'alimentation, consulter les directives d'installation.

Warnung Lesen Sie die Installationsanweisungen, bevor Sie das System an die Stromquelle anschließen.



WARNING: Avvertenza Consultare le istruzioni di installazione prima di collegare il sistema all'alimentatore.

Advarsel Les installasjonsinstruksjonene før systemet kobles til strømkilden.

Aviso Leia as instruções de instalação antes de ligar o sistema à sua fonte de energia.

¡Atención! Ver las instrucciones de instalación antes de conectar el sistema a la red de alimentación.

Varning! Läs installationsanvisningarna innan du kopplar systemet till dess strömförsörjningsenhet.

Rack-Mounting Requirements and Warnings

Ensure that the equipment rack into which the Services Router is installed is evenly and securely supported, to avoid the hazardous condition that could result from uneven mechanical loading.



WARNING: To prevent bodily injury when mounting or servicing the router in a rack, take the following precautions to ensure that the system remains stable. The following directives help maintain your safety:

- The router must be installed into a rack that is secured to the building structure.
- The router should be mounted at the bottom of the rack if it is the only unit in the rack.
- When mounting the router in a partially filled rack, load the rack from the bottom to the top with the heaviest component at the bottom of the rack.
- If the rack is provided with stabilizing devices, install the stabilizers before mounting or servicing the router in the rack.



WARNING: Waarschuwing Om lichamelijk letsel te voorkomen wanneer u dit toestel in een rek monteert of het daar een servicebeurt geeft, moet u speciale voorzorgsmaatregelen nemen om ervoor te zorgen dat het toestel stabiel blijft. De onderstaande richtlijnen worden verstrekt om uw veiligheid te verzekeren:

- De Juniper Networks router moet in een stellage worden geïnstalleerd die aan een bouwsel is verankerd.
- Dit toestel dient onderaan in het rek gemonteerd te worden als het toestel het enige in het rek is.
- Wanneer u dit toestel in een gedeeltelijk gevuld rek monteert, dient u het rek van onderen naar boven te laden met het zwaarste onderdeel onderaan in het rek.
- Als het rek voorzien is van stabiliseringshulpmiddelen, dient u de stabilisatoren te monteren voordat u het toestel in het rek monteert of het daar een servicebeurt geeft.



WARNING: Varoitus Kun laite asetetaan telineeseen tai huolletaan sen ollessa telineessä, on noudatettava erityisiä varotoimia järjestelmän vakavuuden säilyttämiseksi, jotta vältytään loukkaantumiselta. Noudata seuraavia turvallisuusohjeita:

- Juniper Networks router on asennettava telineeseen, joka on kiinnitetty rakennukseen.
- Jos telineessä ei ole muita laitteita, aseta laite telineen alaosaan.
- Jos laite asetetaan osaksi täytettyyn telineeseen, aloita kuormittaminen sen alaosasta kaikkein raskaimmalla esineellä ja siirry sitten sen yläosaan.
- Jos telinettä varten on vakaimet, asenna ne ennen laitteen asettamista telineeseen tai sen huoltamista siinä.



WARNING: Attention Pour éviter toute blessure corporelle pendant les opérations de montage ou de réparation de cette unité en casier, il convient de prendre des précautions spéciales afin de maintenir la stabilité du système. Les directives ci-dessous sont destinées à assurer la protection du personnel:

- Le rack sur lequel est monté le Juniper Networks router doit être fixé à la structure du bâtiment.
- Si cette unité constitue la seule unité montée en casier, elle doit être placée dans le bas.
- Si cette unité est montée dans un casier partiellement rempli, charger le casier de bas en haut en plaçant l'élément le plus lourd dans le bas.
- Si le casier est équipé de dispositifs stabilisateurs, installer les stabilisateurs avant de monter ou de réparer l'unité en casier.



WARNING: Warnung Zur Vermeidung von Körperverletzung beim Anbringen oder Warten dieser Einheit in einem Gestell müssen Sie besondere Vorkehrungen treffen, um sicherzustellen, daß das System stabil bleibt. Die folgenden Richtlinien sollen zur Gewährleistung Ihrer Sicherheit dienen:

- Der Juniper Networks router muß in einem Gestell installiert werden, das in der Gebäudestruktur verankert ist.
- Wenn diese Einheit die einzige im Gestell ist, sollte sie unten im Gestell angebracht werden.
- Bei Anbringung dieser Einheit in einem zum Teil gefüllten Gestell ist das Gestell von unten nach oben zu laden, wobei das schwerste Bauteil unten im Gestell anzubringen ist.
- Wird das Gestell mit Stabilisierungszubehör geliefert, sind zuerst die Stabilisatoren zu installieren, bevor Sie die Einheit im Gestell anbringen oder sie warten.



WARNING: Avvertenza Per evitare infortuni fisici durante il montaggio o la manutenzione di questa unità in un supporto, occorre osservare speciali precauzioni per garantire che il sistema rimanga stabile. Le seguenti direttive vengono fornite per garantire la sicurezza personale:

- Il Juniper Networks router deve essere installato in un telaio, il quale deve essere fissato alla struttura dell'edificio.
- Questa unità deve venire montata sul fondo del supporto, se si tratta dell'unica unità da montare nel supporto.
- Quando questa unità viene montata in un supporto parzialmente pieno, caricare il supporto dal basso all'alto, con il componente più pesante sistemato sul fondo del supporto.
- Se il supporto è dotato di dispositivi stabilizzanti, installare tali dispositivi prima di montare o di procedere alla manutenzione dell'unità nel supporto.



WARNING: Advarsel Unngå fysiske skader under montering eller reparasjonsarbeid på denne enheten når den befinner seg i et kabinett. Vær nøye med at systemet er stabilt. Følgende retningslinjer er gitt for å verne om sikkerheten:

- Juniper Networks router må installeres i et stativ som er forankret til bygningsstrukturen.
- Denne enheten bør monteres nederst i kabinettet hvis dette er den eneste enheten i kabinettet.
- Ved montering av denne enheten i et kabinett som er delvis fylt, skal kabinettet lastes fra bunnen og opp med den tyngste komponenten nederst i kabinettet.
- Hvis kabinettet er utstyrt med stabiliseringsutstyr, skal stabilisatorene installeres før montering eller utføring av reparasjonsarbeid på enheten i kabinettet.



WARNING: Aviso Para se prevenir contra danos corporais ao montar ou reparar esta unidade numa estante, deverá tomar precauções especiais para se certificar de que o sistema possui um suporte estável. As seguintes directrizes ajudá-lo-ão a efectuar o seu trabalho com segurança:

- O Juniper Networks router deverá ser instalado numa prateleira fixa à estrutura do edificio.
- Esta unidade deverá ser montada na parte inferior da estante, caso seja esta a única unidade a ser montada.
- Ao montar esta unidade numa estante parcialmente ocupada, coloque os itens mais pesados na parte inferior da estante, arrumando-os de baixo para cima.
- Se a estante possuir um dispositivo de estabilização, instale-o antes de montar ou reparar a unidade.



WARNING: ¡Atención! Para evitar lesiones durante el montaje de este equipo sobre un bastidor, o posteriormente durante su mantenimiento, se debe poner mucho cuidado en que el sistema quede bien estable. Para garantizar su seguridad, proceda según las siguientes instrucciones:

- El Juniper Networks router debe instalarse en un bastidor fijado a la estructura del edificio.
- Colocar el equipo en la parte inferior del bastidor, cuando sea la única unidad en el mismo.
- Cuando este equipo se vaya a instalar en un bastidor parcialmente ocupado, comenzar la instalación desde la parte inferior hacia la superior colocando el equipo más pesado en la parte inferior.
- Si el bastidor dispone de dispositivos estabilizadores, instalar éstos antes de montar o proceder al mantenimiento del equipo instalado en el bastidor.



WARNING: Varning! För att undvika kroppsskada när du installerar eller utför underhållsarbete på denna enhet på en ställning måste du vidta särskilda försiktighetsåtgärder för att försäkra dig om att systemet står stadigt. Följande riktlinjer ges för att trygga din säkerhet:

- Juniper Networks router måste installeras i en ställning som är förankrad i byggnadens struktur.
- Om denna enhet är den enda enheten på ställningen skall den installeras längst ned på ställningen.
- Om denna enhet installeras på en delvis fylld ställning skall ställningen fyllas nedifrån och upp, med de tyngsta enheterna längst ned på ställningen.
- Om ställningen är försedd med stabiliseringsdon skall dessa monteras fast innan enheten installeras eller underhålls på ställningen.

Ramp Warning



WARNING: When installing the router, do not use a ramp inclined at more than 10 degrees.

Waarschuwing Gebruik een oprijplaat niet onder een hoek van meer dan 10 graden.

Varoitus Älä käytä sellaista kaltevaa pintaa, jonka kaltevuus ylittää 10 astetta.

Attention Ne pas utiliser une rampe dont l'inclinaison est supérieure à 10 degrés.

Warnung Keine Rampen mit einer Neigung von mehr als 10 Grad verwenden.



WARNING: Avvertenza Non usare una rampa con pendenza superiore a 10 gradi.

Advarsel Bruk aldri en rampe som heller mer enn 10 grader.

Aviso Não utilize uma rampa com uma inclinação superior a 10 graus.

¡Atención! No usar una rampa inclinada más de 10 grados

Varning! Använd inte ramp med en lutning på mer än 10 grader.

Laser and LED Safety Guidelines and Warnings

Single-mode Physical Interface Modules (PIMs) are equipped with laser transmitters, which are considered a Class 1 Laser Product by the U.S. Food and Drug Administration, and are evaluated as a Class 1 Laser Product per EN 60825–1 requirements.

Observe the following guidelines and warnings:

- General Laser Safety Guidelines on page 276
- Class 1 Laser Product Warning on page 277
- Class 1 LED Product Warning on page 277
- Laser Beam Warning on page 278
- Radiation from Open Port Apertures Warning on page 279

General Laser Safety Guidelines

When working around PIMs, observe the following safety guidelines to prevent eye injury:

- Do not look into unterminated ports or at fibers that connect to unknown sources.
- Do not examine unterminated optical ports with optical instruments.

- Avoid direct exposure to the beam.



WARNING: Unterminated optical connectors can emit invisible laser radiation. The lens in the human eye focuses all the laser power on the retina, so focusing the eye directly on a laser source—even a low-power laser—could permanently damage the eye.

Class 1 Laser Product Warning



WARNING: Class 1 laser product.

Waarschuwing Klasse-1 laser produkt.

Varoitus Luokan 1 lasertuote.

Attention Produit laser de classe I.

Warnung Laserprodukt der Klasse 1.



WARNING: Avvertenza Prodotto laser di Classe 1.

Advarsel Laserprodukt av klasse 1.

Aviso Produto laser de classe 1.

¡Atención! Producto láser Clase I.

Varning! Laserprodukt av klass 1.

Class 1 LED Product Warning



WARNING: Class 1 LED product.

Waarschuwing Klasse 1 LED-product.

Varoitus Luokan 1 valodiodituote.

Attention Alarme de produit LED Class I.

Warnung Class 1 LED-Produktwarnung.



WARNING: Avvertenza Avvertenza prodotto LED di Classe 1.

Advarsel LED-produkt i klasse 1.

Aviso Produto de classe 1 com LED.

¡Atención! Aviso sobre producto LED de Clase 1.

Varning! Lysdiodprodukt av klass 1.

Laser Beam Warning



WARNING: Do not stare into the laser beam or view it directly with optical instruments.



WARNING: Waarschuwing Niet in de straal staren of hem rechtstreeks bekijken met optische instrumenten.



WARNING: Varoitus Älä katso säteeseen äläkä tarkastele sitä suoraan optisen laitteen avulla.



WARNING: Attention Ne pas fixer le faisceau des yeux, ni l'observer directement à l'aide d'instruments optiques.



WARNING: Warnung Nicht direkt in den Strahl blicken und ihn nicht direkt mit optischen Geräten prüfen.



WARNING: Avvertenza Non fissare il raggio con gli occhi né usare strumenti ottici per osservarlo direttamente.



WARNING: Advarsel Stirr eller se ikke direkte p strlen med optiske instrumenter.



WARNING: Aviso Não olhe fixamente para o raio, nem olhe para ele directamente com instrumentos ópticos.



WARNING: ¡Atención! No mirar fijamente el haz ni observarlo directamente con instrumentos ópticos.



WARNING: Varning! Rikta inte blicken in mot strålen och titta inte direkt på den genom optiska instrument.

Radiation from Open Port Apertures Warning



WARNING: Because invisible radiation may be emitted from the aperture of the port when no fiber cable is connected, avoid exposure to radiation and do not stare into open apertures.



WARNING: Waarschuwing Aangezien onzichtbare straling vanuit de opening van de poort kan komen als er geen fiberkabel aangesloten is, dient blootstelling aan straling en het kijken in open openingen vermeden te worden.



WARNING: Varoitus Koska portin aukosta voi emittoitua näkymätöntä säteilyä, kun kuitukaapelia ei ole kytkettynä, vältä säteilylle altistumista äläkä katso avoimiin aukkoihin.



WARNING: Attention Des radiations invisibles à l'il nu pouvant traverser l'ouverture du port lorsqu'aucun câble en fibre optique n'y est connecté, il est recommandé de ne pas regarder fixement l'intérieur de ces ouvertures.



WARNING: Warnung Aus der Port-Öffnung können unsichtbare Strahlen emittieren, wenn kein Glasfaserkabel angeschlossen ist. Vermeiden Sie es, sich den Strahlungen auszusetzen, und starren Sie nicht in die Öffnungen!



WARNING: Avvertenza Quando i cavi in fibra non sono inseriti, radiazioni invisibili possono essere emesse attraverso l'apertura della porta. Evitate di esporvi alle radiazioni e non guardate direttamente nelle aperture.



WARNING: Advarsel Unngå utsettelse for stråling, og stirr ikke inn i åpninger som er åpne, fordi usynlig stråling kan emiteres fra portens åpning når det ikke er tilkoblet en fiberkabel.



WARNING: Aviso Dada a possibilidade de emissão de radiação invisível através do orifício da via de acesso, quando esta não tiver nenhum cabo de fibra conectado, deverá evitar a exposição à radiação e não deverá olhar fixamente para orifícios que se encontrarem a descoberto.



WARNING: ¡Atención! Debido a que la apertura del puerto puede emitir radiación invisible cuando no existe un cable de fibra conectado, evite mirar directamente a las aperturas para no exponerse a la radiación.



WARNING: Varning! Osynlig strålning kan avges från en portöppning utan ansluten fiberkabel och du bör därför undvika att bli utsatt för strålning genom att inte stirra in i oskyddade öppningar.

Maintenance and Operational Safety Guidelines and Warnings

As you maintain the Services Router, observe the following guidelines and warnings:

- Battery Handling Warning on page 280
- Jewelry Removal Warning on page 282
- Lightning Activity Warning on page 283
- Operating Temperature Warning on page 284
- Product Disposal Warning on page 286

Battery Handling Warning



WARNING: Replacing the battery incorrectly might result in an explosion. Replace the battery only with the same or equivalent type recommended by the manufacturer. Dispose of used batteries according to the manufacturer's instructions.



WARNING: Waarschuwing Er is ontploffingsgevaar als de batterij verkeerd vervangen wordt. Vervang de batterij slechts met hetzelfde of een equivalent type dat door de fabrikant aanbevolen is. Gebruikte batterijen dienen overeenkomstig fabrieksvoorschriften weggeworpen te worden.



WARNING: Varoitus Räjähdyksen vaara, jos akku on vaihdettu väärään akkuun. Käytä vaihtamiseen ainoastaan saman- tai vastaavantyyppistä akkua, joka on valmistajan suosittelema. Hävitä käytetyt akut valmistajan ohjeiden mukaan.



WARNING: Attention Danger d'explosion si la pile n'est pas remplacée correctement. Ne la remplacer que par une pile de type semblable ou équivalent, recommandée par le fabricant. Jeter les piles usagées conformément aux instructions du fabricant.



WARNING: Warnung Bei Einsetzen einer falschen Batterie besteht Explosionsgefahr. Ersetzen Sie die Batterie nur durch den gleichen oder vom Hersteller empfohlenen Batterietyp. Entsorgen Sie die benutzten Batterien nach den Anweisungen des Herstellers.



WARNING: Advarsel Det kan være fare for eksplosjon hvis batteriet skiftes på feil måte. Skift kun med samme eller tilsvarende type som er anbefalt av produsenten. Kasser brukte batterier i henhold til produsentens instruksjoner.



WARNING: Avvertenza Pericolo di esplosione se la batteria non è installata correttamente. Sostituire solo con una di tipo uguale o equivalente, consigliata dal produttore. Eliminare le batterie usate secondo le istruzioni del produttore.



WARNING: Aviso Existe perigo de explosão se a bateria for substituída incorrectamente. Substitua a bateria por uma bateria igual ou de um tipo equivalente recomendado pelo fabricante. Destrua as baterias usadas conforme as instruções do fabricante.



WARNING: ¡Atención! Existe peligro de explosión si la batería se reemplaza de manera incorrecta. Reemplazar la batería exclusivamente con el mismo tipo o el equivalente recomendado por el fabricante. Desechar las baterías gastadas según las instrucciones del fabricante.



WARNING: Varning! Explosionsfara vid felaktigt batteribyte. Ersätt endast batteriet med samma batterityp som rekommenderas av tillverkaren eller motsvarande. Följ tillverkarens anvisningar vid kassering av använda batterier.

Jewelry Removal Warning



WARNING: Before working on equipment that is connected to power lines, remove jewelry, including rings, necklaces, and watches. Metal objects heat up when connected to power and ground and can cause serious burns or weld the metal object to the terminals.



WARNING: Waarschuwing Alvorens aan apparatuur te werken die met elektrische leidingen is verbonden, sieraden (inclusief ringen, kettingen en horloges) verwijderen. Metalen voorwerpen worden warm wanneer ze met stroom en aarde zijn verbonden, en kunnen ernstige brandwonden veroorzaken of het metalen voorwerp aan de aansluitklemmen lassen.



WARNING: Varoitus Ennen kuin työskentelet voimavirtajohtoihin kytkettyjen laitteiden parissa, ota pois kaikki korut (sormukset, kaulakorut ja kellot mukaan lukien). Metalliesineet kuumenevat, kun ne ovat yhteydessä sähkövirran ja maan kanssa, ja ne voivat aiheuttaa vakavia palovammoja tai hitsata metalliesineet kiinni liitäntänapoihin.



WARNING: Attention Avant d'accéder à cet équipement connecté aux lignes électriques, ôter tout bijou (anneaux, colliers et montres compris). Lorsqu'ils sont branchés à l'alimentation et reliés à la terre, les objets métalliques chauffent, ce qui peut provoquer des blessures graves ou souder l'objet métallique aux bornes.



WARNING: Warnung Vor der Arbeit an Geräten, die an das Netz angeschlossen sind, jeglichen Schmuck (einschließlich Ringe, Ketten und Uhren) abnehmen. Metallgegenstände erhitzen sich, wenn sie an das Netz und die Erde angeschlossen werden, und können schwere Verbrennungen verursachen oder an die Anschlußklemmen angeschweißt werden.



WARNING: Avvertenza Prima di intervenire su apparecchiature collegate alle linee di alimentazione, togliersi qualsiasi monile (inclusi anelli, collane, braccialetti ed orologi). Gli oggetti metallici si riscaldano quando sono collegati tra punti di alimentazione e massa: possono causare ustioni gravi oppure il metallo può saldarsi ai terminali.



WARNING: Advarsel Fjern alle smykker (inkludert ringer, halskjeder og klokker) før du skal arbeide på utstyr som er koblet til kraftledninger. Metallgjenstander som er

koblet til kraftledninger og jord blir svært varme og kan forårsake alvorlige brannskader eller smelte fast til polene.



WARNING: Aviso Antes de trabalhar em equipamento que esteja ligado a linhas de corrente, retire todas as jóias que estiver a usar (incluindo anéis, fios e relógios). Os objectos metálicos aquecerão em contacto com a corrente e em contacto com a ligação à terra, podendo causar queimaduras graves ou ficarem soldados aos terminais.



WARNING: ¡Atención! Antes de operar sobre equipos conectados a líneas de alimentación, quitarse las joyas (incluidos anillos, collares y relojes). Los objetos de metal se calientan cuando se conectan a la alimentación y a tierra, lo que puede ocasionar quemaduras graves o que los objetos metálicos queden soldados a los bornes.



WARNING: Varning! Tag av alla smycken (inklusive ringar, halsband och armbandsur) innan du arbetar på utrustning som är kopplad till kraftledningar. Metallobjekt hettas upp när de kopplas ihop med ström och jord och kan förorsaka allvarliga brännskador; metallobjekt kan också sammansvetsas med kontakterna.

Lightning Activity Warning



WARNING: Do not work on the system or connect or disconnect cables during periods of lightning activity.



WARNING: Waarschuwing Tijdens onweer dat gepaard gaat met bliksem, dient u niet aan het systeem te werken of kabels aan te sluiten of te ontkoppelen.



WARNING: Varoitus Älä työskentele järjestelmän parissa äläkä yhdistä tai irrota kaapeleita ukkosilmalla.



WARNING: Attention Ne pas travailler sur le système ni brancher ou débrancher les câbles pendant un orage.



WARNING: Warnung Arbeiten Sie nicht am System und schließen Sie keine Kabel an bzw. trennen Sie keine ab, wenn es gewittert.



WARNING: Avvertenza Non lavorare sul sistema o collegare oppure scollegare i cavi durante un temporale con fulmini.



WARNING: Advarsel Utfør aldri arbeid på systemet, eller koble kabler til eller fra systemet når det tordner eller lyner.



WARNING: Aviso Não trabalhe no sistema ou ligue e desligue cabos durante períodos de mau tempo (trovoada).



WARNING: ¡Atención! No operar el sistema ni conectar o desconectar cables durante el transcurso de descargas eléctricas en la atmósfera.



WARNING: Varning! Vid åska skall du aldrig utföra arbete på systemet eller ansluta eller koppla loss kablar.

Operating Temperature Warning



WARNING: To prevent the router from overheating, do not operate it in an area that exceeds the maximum recommended ambient temperature of 104°F (40°C). To prevent airflow restriction, allow at least 6 inches (15.2 cm) of clearance around the ventilation openings.



WARNING: Waarschuwing Om te voorkomen dat welke router van de Juniper Networks router dan ook oververhit raakt, dient u deze niet te bedienen op een plaats waar de maximale aanbevolen omgevingstemperatuur van 40°C wordt overschreden. Om te voorkomen dat de luchtstroom wordt beperkt, dient er minstens 15,2 cm speling rond de ventilatie-openingen te zijn.



WARNING: Varoitus Ettei Juniper Networks router-sarjan reititin ylikuumentuisi, sitä ei saa käyttää tilassa, jonka lämpötila ylittää korkeimman suositellun ympäristölämpötilan 40°C. Ettei ilmanvaihto estyisi, tuuletusaukkojen ympärille on jätettävä ainakin 15,2 cm tilaa.



WARNING: Attention Pour éviter toute surchauffe des routeurs de la gamme Juniper Networks router, ne l'utilisez pas dans une zone où la température ambiante est supérieure à 40°C. Pour permettre un flot d'air constant, dégagez un espace d'au moins 15,2 cm autour des ouvertures de ventilations.



WARNING: Warnung Um einen Router der router vor Überhitzung zu schützen, darf dieser nicht in einer Gegend betrieben werden, in der die Umgebungstemperatur das empfohlene Maximum von 40°C überschreitet. Um Lüftungsverschluß zu verhindern, achten Sie darauf, daß mindestens 15,2 cm lichter Raum um die Lüftungsöffnungen herum frei bleibt.



WARNING: Avvertenza Per evitare il surriscaldamento dei router, non adoperateli in un locale che ecceda la temperatura ambientale massima di 40°C. Per evitare che la circolazione dell'aria sia impedita, lasciate uno spazio di almeno 15.2 cm di fronte alle aperture delle ventole.



WARNING: Advarsel Unngå overoppheting av eventuelle rutere i Juniper Networks router Disse skal ikke brukes på steder der den anbefalte maksimale omgivelsestemperaturen overstiger 40°C (104°F). Sørg for at klaringen rundt lufteåpningene er minst 15,2 cm (6 tommer) for å forhindre nedsatt luftsirkulasjon.



WARNING: Aviso Para evitar o sobreaquecimento do encaminhador Juniper Networks router, não utilize este equipamento numa área que exceda a temperatura máxima recomendada de 40°C. Para evitar a restrição à circulação de ar, deixe pelo menos um espaço de 15,2 cm à volta das aberturas de ventilação.



WARNING: ¡Atención! Para impedir que un encaminador de la serie Juniper Networks router se recaliente, no lo haga funcionar en un área en la que se supere la temperatura ambiente máxima recomendada de 40°C. Para impedir la restricción de la entrada de aire, deje un espacio mínimo de 15,2 cm alrededor de las aperturas para ventilación.



WARNING: Varning! Förhindra att en Juniper Networks router överhettas genom att inte använda den i ett område där den maximalt rekommenderade omgivningstemperaturen på 40°C överskrids. Förhindra att luftcirkulationen inskränks genom att se till att det finns fritt utrymme på minst 15,2 cm omkring ventilationsöppningarna.

Product Disposal Warning



WARNING: Disposal of this product must be handled according to all national laws and regulations.



WARNING: Waarschuwing Dit produkt dient volgens alle landelijke wetten en voorschriften te worden afgedankt.



WARNING: Varoitus Tämän tuotteen lopullisesta hävittämisestä tulee huolehtia kaikkia valtakunnallisia lakeja ja säännöksiä noudattaen.



WARNING: Attention La mise au rebut définitive de ce produit doit être effectuée conformément à toutes les lois et réglementations en vigueur.



WARNING: Warnung Dieses Produkt muß den geltenden Gesetzen und Vorschriften entsprechend entsorgt werden.



WARNING: Avvertenza L'eliminazione finale di questo prodotto deve essere eseguita osservando le normative italiane vigenti in materia



WARNING: Advarsel Endelig disponering av dette produktet må skje i henhold til nasjonale lover og forskrifter.



WARNING: Aviso A descartagem final deste produto deverá ser efectuada de acordo com os regulamentos e a legislação nacional.



WARNING: ¡Atención! El desecho final de este producto debe realizarse según todas las leyes y regulaciones nacionales



WARNING: Varning! Slutlig kassering av denna produkt bör skötas i enlighet med landets alla lagar och föreskrifter.

Agency Approvals

The Services Router complies with the following standards:

- Safety
  - CAN/CSA-22.2 No. 60950–1–03–UL 60950–1 Safety of Information Technology Equipment
  - EN 60950–1 Safety of Information Technology Equipment
  - EN 60825-1 Safety of Laser Products - Part 1: Equipment Classification, Requirements and User's Guide
- EMC (J2320 and J2350)
  - AS/NZS 3548 Class A (Australia/New Zealand)
  - EN 55022 Class A Emissions (Europe)
  - FCC Part 15 Class A (USA)
  - VCCI Class A (Japan)
  - FCC Part 68
  - Industry Canada CS-03
- EMC (J4320 and J6350)
  - AS/NZS 3548 Class B (Australia/New Zealand)
  - EN 55022 Class B Emissions (Europe)
  - FCC Part 15 Class B (USA)
  - VCCI Class B (Japan)
  - FCC Part 68
  - Industry Canada CS-03
- Immunity
  - EN 61000-3-2 Power Line Harmonics
  - EN 61000-3-3 Voltage Fluctuations and Flicker
  - EN 61000-4-2 ESD
  - EN 61000-4-3 Radiated Immunity
  - EN 61000-4-4 EFT
  - EN 61000-4-5 Surge
  - EN 61000-4-6 Low Frequency Common Immunity
  - EN 61000-4-11 Voltage Dips and Sags
- ETSI

- ETSI EN-300386-2 Telecommunication Network Equipment. Electromagnetic Compatibility Requirements

Compliance Statements for Environmental Requirements

Lithium Battery

Batteries in this product are not based on mercury, lead, or cadmium substances. The batteries used in this product are in compliance with EU Directives 91/157/EEC, 93/86/EEC, and 98/101/EEC. The product documentation includes instructional information on the proper method of reclamation and recycling.

Compliance Statements for NEBS

This product complies with the following Network Equipment Building System (NEBS) standards:

- The equipment is suitable for installation as part of the Common Bonding Network (CBN).
- The equipment is suitable for installation in locations where the National Electrical Code (NEC) applies.
- The battery return connection is to be treated as a Common DC return (DC-C), as defined in GR-1089-CORE.

Compliance Statements for EMC Requirements

- Canada on page 288
- European Community on page 290
- Japan on page 291
- United States on page 292

Canada

This Class B digital apparatus complies with Canadian ICES-003.

Cet appareil numérique de la classe B est conforme à la norme NMB-003 du Canada.

The Industry Canada label identifies certified equipment. This certification means that the equipment meets certain telecommunications network protective, operational, and safety requirements. Industry Canada does not guarantee the equipment will operate to the users' satisfaction.

Before installing this equipment, users should ensure that it is permissible to be connected to the facilities of the local telecommunications company. The equipment must also be installed using an acceptable method of connection. In some cases, the inside wiring associated with a single line individual service may be extended by

means of a certified connector assembly. The customer should be aware that compliance with the above conditions may not prevent degradation of service in some situations.

Repairs to certified equipment should be made by an authorized Canadian maintenance facility designated by the supplier. Any repairs or alterations made by the user to this equipment, or equipment malfunctions, may give the telecommunications company cause to request the user to disconnect the equipment.



CAUTION: Users should not attempt to make electrical ground connections by themselves, but should contact the appropriate inspection authority or an electrician, as appropriate.

Users should ensure for their own protection that the electrical ground connections of the power utility, telephone lines, and internal metallic water pipe system, if present, are connected together. This precaution may be particularly important in rural areas.

European Community

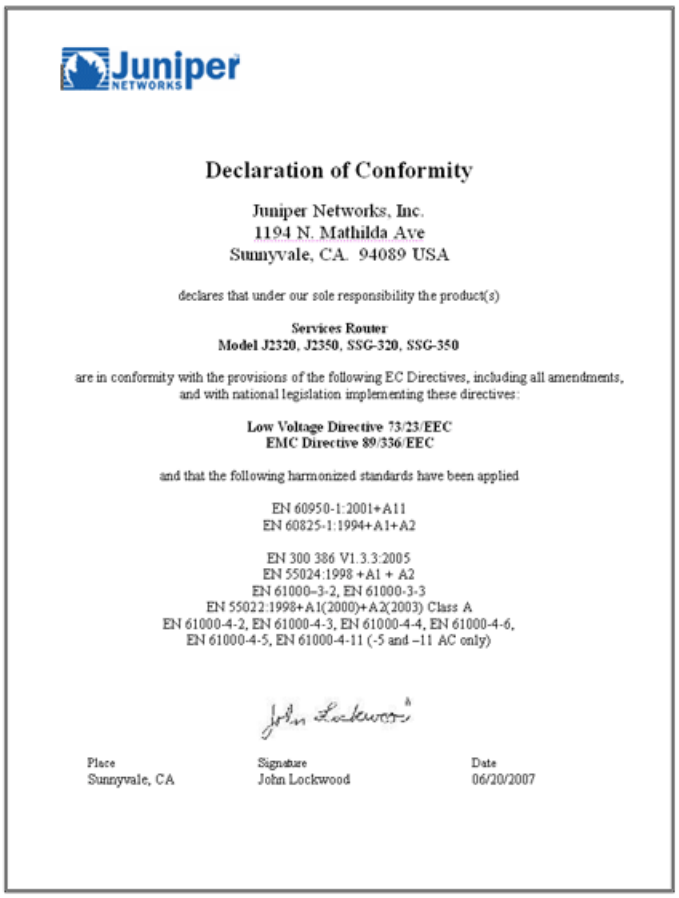

Juniper NETWORKS

Declaration of Conformity

Juniper Networks, Inc.
1194 N. Mathilda Ave
Sunnyvale, CA. 94089 USA

declares that under our sole responsibility the product(s)

Services Router
Model J2320, J2350, SSG-320, SSG-350

are in conformity with the provisions of the following EC Directives, including all amendments, and with national legislation implementing these directives:

Low Voltage Directive 73/23/EEC
EMC Directive 89/336/EEC

and that the following harmonized standards have been applied

EN 60950-1:2001+A11
EN 60825-1:1994+A1+A2

EN 300 386 V1.3.3:2005
EN 55024:1998 +A1 + A2
EN 61000-3-2, EN 61000-3-3
EN 55022:1998+A1(2000)+A2(2003) Class A
EN 61000-4-2, EN 61000-4-3, EN 61000-4-4, EN 61000-4-6,
EN 61000-4-5, EN 61000-4-11 (-5 and –11 AC only)

Place	Signature	Date
Sunnyvale, CA	John Lockwood	06/20/2007

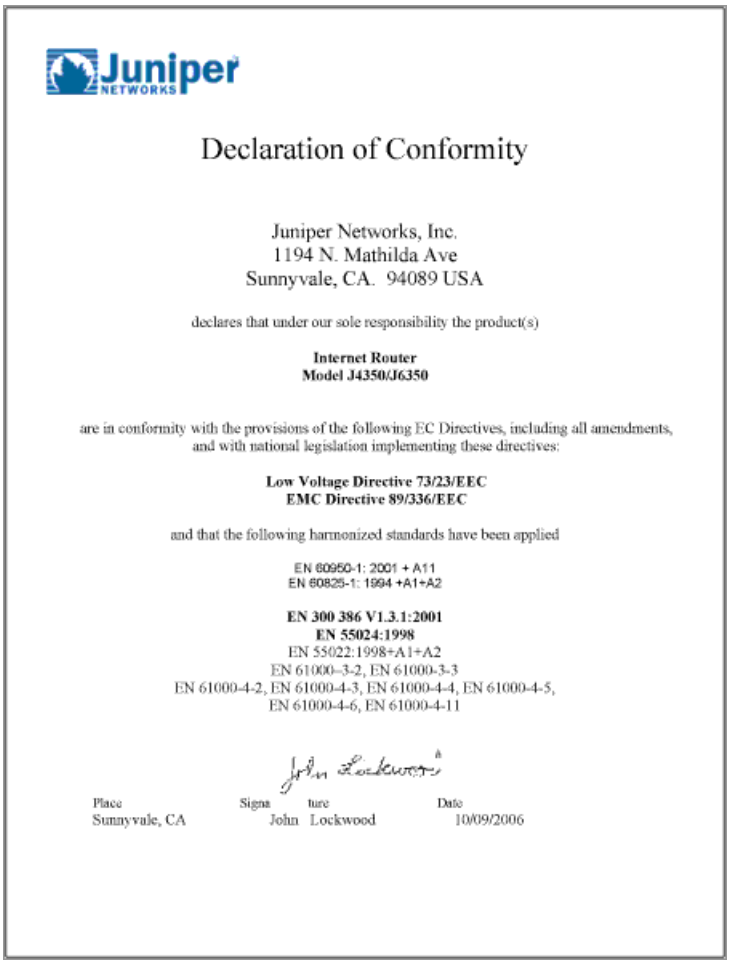

Juniper NETWORKS

Declaration of Conformity

Juniper Networks, Inc.
1194 N. Mathilda Ave
Sunnyvale, CA. 94089 USA

declares that under our sole responsibility the product(s)

Internet Router
Model J4350/J6350

are in conformity with the provisions of the following EC Directives, including all amendments, and with national legislation implementing these directives:

Low Voltage Directive 73/23/EEC
EMC Directive 89/336/EEC

and that the following harmonized standards have been applied

EN 60950-1: 2001 + A11
EN 60825-1: 1994 +A1+A2

EN 300 386 V1.3.1:2001
EN 55024:1998
EN 55022:1998+A1+A2
EN 61000–3-2, EN 61000-3-3
EN 61000-4-2, EN 61000-4-3, EN 61000-4-4, EN 61000-4-5,
EN 61000-4-6, EN 61000-4-11

Place	Signature	Date
Sunnyvale, CA	John Lockwood	10/09/2006

Japan

この装置は、情報処理装置等電波障害自主規制協議会（ＶＣＣＩ）の基準に基づくクラスＢ情報技術装置です。この装置は、家庭環境で使用することを目的としていますが、この装置がラジオやテレビジョン受信機に近接して使用されると、受信障害を引き起こすことがあります。
取扱説明書に従って正しい取り扱いをして下さい。

The preceding translates as follows:

This is a Class B product based on the standard of the Voluntary Control Council for Interference by Information Technology Equipment (VCCI). If this product is used near a radio or television receiver in a domestic environment, it may cause radio interference. Install and use the equipment according to the instruction manual.

United States

The Services Router has been tested and found to comply with the limits for a Class B digital device, pursuant to Part 15 of the FCC Rules. These limits are designed to provide reasonable protection against harmful interference when the equipment is operated in a commercial environment. This equipment generates, uses, and can radiate radio frequency energy and, if not installed and used in accordance with the instruction manual, may cause harmful interference to radio communications. Operation of this equipment in a residential area is likely to cause harmful interference in which case the user will be required to correct the interference at his own expense.

FCC Part 15 Statement

This equipment has been tested and found to comply with the limits for a Class B digital device pursuant to Part 15 of the FCC Rules. These limits are designed to provide reasonable protection against harmful interference in a residential installation. This equipment generates, uses, and can radiate radio frequency energy and, if not installed and used in accordance with the instructions, may cause harmful interference to radio communications. However, there is no guarantee that interference will not occur in a particular installation.

If this equipment does cause harmful interference to radio or television reception, which can be determined by turning the equipment off and on, the user is encouraged to try and correct the interference by one or more of the following measures:

- Reorient or relocate the receiving antenna.
- Increase the separation between the equipment and the receiver.
- Connect the equipment into an outlet on a circuit different from that to which the receiver is connected.
- Consult the dealer or an experienced radio or TV technician for help.

FCC Part 68 Statement

This equipment complies with Part 68 of the Federal Communications Commission (FCC) rules. On the product is a label that contains the FCC registration number for this device. If requested, this information must be provided to the telephone company.

This equipment is designed to be connected to the telephone network or premises wiring using a compatible modular jack which is Part 68 compliant. See installation instructions for details.

If this device causes harm to the telephone network, the telephone company will notify you in advance that temporary discontinuance of service may be required. The telephone company may request that you disconnect the equipment until the problem is resolved. The telephone company may make changes in its facilities, equipment, operations or procedures that could affect the operation of this equipment. If this happens, the telephone company will provide advance notice in order for you to make necessary modifications to maintain uninterrupted service.

If trouble is experienced with this equipment or for repair or warranty information, please follow the applicable procedures explained in the “Technical Support” section of this manual.

- FCC Registration Number—See label on product.
- Required Connector (USOC)—RJ-48C
- Service Order Code (SOC)—6.ON

Part 5
Index

■ Index on page 297

Index

Symbols

#, comments in configuration statements....xviii
#, configuration mode command prompt....96
( ), in syntax descriptions....xviii
* (red asterisk)....89
4-Port Fast Ethernet ePIM....62
4-Port ISDN BRI S/T PIM
  description....63
  PIM ONLINE LED....64
4-Port ISDN BRI U PIM
  description....63
  PIM ONLINE LED....64
< >, in syntax descriptions....xviii
>, operational mode command prompt....95
? command
  for CLI online help....99
  in configuration mode....96
  in operational mode....95
? icon 89
[ ], in configuration statements....xviii
{ }, in configuration statements....xviii
| (pipe), in syntax descriptions....xviii

A

AC plug types....112
AC power
  connecting power....126
  cords *See* AC power cords
  dedicated AC power feed requirement....198
  electrical specifications....111
  grounding the router....126
  installing a J6350 power supply....197
  J2320 system....24
  J2350 system....24
  J4350 system....36
  J6350 system....37
  removing a J6350 power supply....196
  requirements....111
  safety guidelines....258
AC power cords
  electrical specifications....112
  physical requirements....111
  plug types....112
  replacing....195
accident, steps to take....266
ACT LED....74
  TIM508....75
  TIM510....76
  TIM514....78
  TIM516....79
  TIM518....80
  TIM521....82
ACTIVITY LED (Dual-Port Fast Ethernet PIM)....61
adapter, console port
  chassis....141, 144
  TGM550....71
addresses
  ge-0/0/0 for autoinstallation....137
  loopback....136
  management interface....137
ADSL PIM
  description....64
  PIM ONLINE LED....65
ADSL ports
  description....64
  LED states....65
  RJ-11 connector pinouts....242
agency approvals....287
air filter
  description....25, 38
  location....211
  replacing....210
airflow
  description....39
  space requirement....105
ALARM LED
  description....21, 34
  indications....213
alarms
  conditions, in chassis components....213
  LED....21, 34
ALM LED....74
  TIM508....75
  TIM510....76
  TIM514....78
  TIM516....79
  TIM518....80
  TIM521....82

alternative boot media *See* boot devices; USB
altitude requirement....108
analog media module *See* TIM514
analog telephone (LINE) ports
TGM550, pinouts....244
TIM508, possible configurations....74
TIM514, pinouts....246
TIM514, possible configurations....77
TIM516, possible configurations....78
TIM518, possible configurations....80
analog trunk (TRUNK) ports
TGM550, pinouts....244
TIM508, possible configurations....74
TIM514, pinouts....246
TIM514, possible configurations....77
TIM516, possible configurations....78
TIM518, possible configurations....80
Annex A; Annex B *See* ADSL; SHDSL
antistatic mat....255
Apply button....91
approvals, agency....287
ASB LED....74
asymmetric digital subscriber line *See* ADSL
AT modem command....144, 145
AT&D1 modem command....144
AT&K0 modem command....144
AT&W modem command....144
ATDT modem command....145
ATS0=1 modem command....144
AUX port....23, 36
auxiliary console port....23, 36
Avaya IG550 Integrated Gateway *See* Avaya VoIP modules
Avaya VoIP modules
connector pinouts....243
grounding, 10 AWG replacement cable....67
heat dissipation....114
LEDs *See* LEDs
non-hot-swappability....67
overview....43
power consumption....114
power management, planning....114
power management, troubleshooting....214
requirements....68
summary....68, 69
TGM550....70
TGM550 maximum gateway capacities....72
TIM508....74
TIM510....75
TIM514....77
TIM516....78
TIM518....79
TIM521....81

B

backup compact flash, removing....188
backup router
defining (configuration editor)....151
description....136
basic connectivity
CLI configuration editor....149
establishing....133
J-Web configuration editor....149
Quick Configuration....145
requirements....138
sample configuration....152
secure Web access....155
verifying....152
battery
environmental compliance....288
handling....280
lithium....288
BGP route reflectors license....164
blank panel
for PIM slots....46
for power supply (J6350)....195
blinking
Fast Ethernet port ACTIVITY LED state (dual-port PIM)....61
Fast Ethernet port link activity LED state (4-port ePIM)....63
Gigabit Ethernet port LED 52
Gigabit Ethernet port TX/RX LED state....23, 35, 54
ISDN BRI ONLINE LED state....64
POWER LED state....21, 33
STATUS (router) LED state....21, 34
TIM508 ACT (active) LED state....75
TIM514 ACT (active) LED state....78
TIM516 ACT (active) LED state....79
TIM518 ACT (active) LED state....80
boot devices....19, 31
external compact flash....24
boot process, backup router for....136
boot sequence....19, 31
Border Gateway Protocol (BGP) route reflectors license....164
bottom pane....86
braces, in configuration statements....xviii
brackets
angle, in syntax descriptions....xviii
square, in configuration statements....xviii
BRI media module *See* TIM521
browser interface *See* J-Web interface
BTUs per hour....108
built-in Ethernet ports *See* Gigabit Ethernet ports
buttons
Apply (Quick Configuration)....91
Cancel (J-Web configuration editor)....92
Cancel (Quick Configuration)....91

Commit (J-Web configuration editor).....92
OK (J-Web configuration editor).....91
OK (Quick Configuration).....91
power.....20, 33
RESET CONFIG.....22, 35

C

cables
AC power *See* AC power cords
ADSL RJ-11 pinouts.....242
arranging for safety.....179
Avaya VoIP 10 AWG replacement grounding cable.....67
chassis console port, DB-9 connector pinouts.....239
chassis console port, RJ-45 connector pinouts.....238
connecting to network media.....125
console port cable (chassis), connecting.....141, 144
console port cable (chassis), replacing.....176
DC cables *See* DC power cables
disconnecting PIM cables.....179
E1 RJ-48 pinouts.....239
Ethernet cable, connecting.....139, 141, 144
Fast Ethernet RJ-45 connector pinout.....237
Gigabit Ethernet RJ-45 connector pinouts (ePIM).....238
Gigabit Ethernet RJ-45 connector pinouts (uPIMs).....237
grounding.....125
ISDN RJ-45 pinouts.....243
PIM, installing.....179
PIM, removing.....179
reducing radio frequency interference (RFI).....110
serial EIA-530A DCE pinouts.....233
serial EIA-530A DTE pinouts.....232
serial PIM specifications.....227
serial RS-232 DCE pinouts.....229
serial RS-232 DTE pinouts.....228
serial RS-422/449 (EIA-449) DCE pinouts.....231
serial RS-422/449 (EIA-449) DTE pinouts.....229
serial V.35 DCE pinouts.....235
serial V.35 DTE pinouts.....234
serial X.21 DCE pinouts.....236
serial X.21 DTE pinouts.....235
SHDSL RJ-11 pinouts.....242
T1 RJ-48 pinouts.....239
TGM550 analog pinouts.....244
TGM550 console port, DB-9 connector pinouts.....244
TGM550 console port, RJ-45 connector pinouts.....244
TIM508 pinouts.....245
TIM510 E1/T1 pinouts.....245
TIM514 analog pinouts.....246
TIM516 pinouts.....246
TIM518 pinouts.....248
TIM521 ISDN BRI pinouts.....249
Canada, compliance statement.....288
Cancel button
J-Web configuration editor.....92
Quick Configuration.....91
case number, for JTAC.....221
certificates *See* SSL certificates
channelized E1 PIM.....57
channelized E1 ports
description.....57
LED states.....59
RJ-48 cable pinouts.....239
channelized T1 PIM.....57
channelized T1 ports
description.....57
LED states.....59
RJ-48 cable pinouts.....239
chassis
alarm conditions and remedies.....213
component serial number labels.....217, 218
cover, replacing (J2320 and J2350).....180
dimensions.....17, 30
environmental tolerances.....108
grounding.....125
heat dissipation.....114
J2320.....14
J2350.....14
J4350.....27
J6350.....27
lifting guidelines.....271
PIM slot numbers.....20, 33
power consumption.....114
power management, planning.....114
power management, troubleshooting.....214
rack requirements.....106
weight.....17, 30
chassis software process.....40
chassisd process.....40
checklist, for site preparation.....117
clear operation, RESET CONFIG button.....22, 35
clear-text access.....138
clearance.....105
CLI *See* JUNOS CLI
CLI configuration editor
basic settings.....149
initial configuration.....149
secure access configuration.....160
statement types.....97
CLI terminal *See* JUNOS CLI
command completion
description.....98
setting on and off.....101
command hierarchy.....94

command prompts
changing....101
configuration mode (#)....96
operational mode (>)....95
command-line interface *See* CLI configuration editor; JUNOS CLI
comments, in configuration statements....xviii
Commit button....92
committed configuration
root password requirement....135
Common Criteria environments
management access affected....138
NTP requirement....135
password limitations....135
compact flash
backup, replacing....188
description....18, 31
external, description....24
external, J2320 and J2350....24
external, replacing....188
inserting....187
location (horizontal)....186
location (vertical)....185
minor (yellow) alarm....213
removing....187
replacing....182, 185
replacing, rotating fans warning....183, 186
compliance
EMC requirements....288
general standards....287
lithium battery....280
components
packing for shipment....223
replacing....175
serial number label....217, 218
troubleshooting....213
See also LEDs
configuration
clearing with RESET CONFIG button....22, 35
factory, resetting with RESET CONFIG button....22, 35
root password requirement....135
configuration editor *See* CLI configuration editor; J-Web configuration editor
configuration hierarchy, J-Web display....90
configuration mode
commands....96
prompt (#)....96
connection
AC power....126
DC power....128
for management....133
network cables....125
to Services Router....139
connectivity
basic *See* basic connectivity
hardware....119
modem (remote) connection....143
regaining lost DHCP lease after initial configuration....147
through J-Web....139
through the CLI locally....141
through the CLI remotely....143
connector pinouts
TIM508 ports....245
TIM516 ports....246
TIM518 ports....248
console port
adapter (chassis)....141, 144
adapter (TGM550)....71
auxiliary console port....23, 36
connecting through the CLI locally....141
connecting through the CLI remotely....143
description....23, 36
on chassis, DB-9 connector pinouts....239
on chassis, RJ-45 connector pinouts....238
on TGM550, DB-9 connector pinouts....244
on TGM550, RJ-45 connector pinouts....244
replacing the cable....176
settings for local CLI connection....142
settings for modem connection at router for remote CLI access....144
settings for modem connection for remote CLI access....145
container statements....97
conventions
how to use this guide....xvi
notice icons....xvii
text and syntax....xvii
cooling system
airflow requirement....105
description....25, 38
Copper Gigabit Ethernet ePIMs
overview....52
pinouts....238
Copper Gigabit Ethernet uPIMs
overview....49
pinouts....237
cords *See* AC power cords; cables; DC power cables
cover, replacing (J2320 and J2350)....180
Crypto Accelerator Module
description....18, 31
installing....204, 207
location....202, 205
removing....203, 206
curly braces, in configuration statements....xviii
customer support....xxi
contacting JTAC....xxi
contacting JTAC for hardware return....220
information required for hardware return....221

D

daemons *See* processes, software
data link switching (DLSw) license....164
datasheets URL....43
DB-9 connector pinouts
chassis console port....239
TGM550 console port....244
DB-9 to DB-25 serial port adapter....144
DC power
cables *See* DC power cables
connecting power....128
dedicated DC power feed requirement....201
electrical specifications....111
grounding requirements and warning....261
grounding the router....129
installing a J6350 power supply....200
J2320 system....24
J2350 system....24
J4350 system....36
J6350 system....37
power disconnection warning....260
removing a J6350 power supply....199
requirements....111
safety guidelines (general)....259
safety guidelines, power sources for redundant power supplies....260
wiring sequence warning....262
wiring terminations warning....264
DC power cables
electrical specifications....113
physical requirements....113
replacing....198
usage warning....259
Declaration of Conformity....290
default gateway
defining (Quick Configuration)....148
description....136
deleting
all configurations with RESCUE CONFIG button....22, 35
licenses (CLI)....168
licenses (J-Web)....167
DHCP (Dynamic Host Configuration Protocol)....137
DHCP server
after initial configuration....137
before initial configuration....137
regaining lost lease after initial configuration....147
diagnosis
chassis....213
hardware....213
dial-up modem connection *See* modem connection to router console port
DID on line ports....74, 77, 80
digital certificate *See* SSL certificates
digital subscriber line *See* ADSL; SHDSL
DIMMs (dual inline memory modules) *See* DRAM modules
direct inward dialing, on line ports....74, 77, 80
DLSw license....164
DNS (Domain Name System)....136
DNS server
defining (configuration editor)....151
defining (Quick Configuration)....148
function....136
documentation set
comments on....xxi
domain name....134
defining (configuration editor)....150
defining (Quick Configuration)....147
See also DNS server
Domain Name System....136
domain search
defining (configuration editor)....151
defining (Quick Configuration)....148
downloading
licenses (J-Web)....167
DRAM modules
installing....194
location....192
removing....193
dry chemical fire extinguishers, prohibited....109
DS1 ports *See* E1 ports; T1 ports
DS3 ports *See* E3 ports; T3 ports
DSL *See* ADSL; SHDSL
dual inline memory modules *See* DRAM modules
Dual-Port Channelized T1/E1/ISDN PRI PIM....57
Dual-Port E1 PIM....56
Dual-Port E3 PIM....59
Dual-Port Fast Ethernet PIM....61
Dual-Port Serial PIM....55
Dual-Port T1 PIM....56
Dual-Port T3 PIM....59

E

E1 ports
description....56
See also channelized E1 ports
LED states....57
RJ-48 cable pinouts....239
E1 trunk ports, TIM510
description....75
pinouts....245
E1/T1 media module *See* TIM508 *See* TIM510 *See* TIM516 *See* TIM518
E3 ports
BNC connector pinouts....242
description....59
LED states....60
earth ground *See* grounding

earthquakes
rack-mount requirements....107
seismic requirements....108
EIA-530A DCE cable pinouts....233
EIA-530A DTE cable pinouts....232
electrical specifications....111
electricity
safety warnings....256
wiring guidelines....110
electromagnetic compatibility (EMC) *See* EMC
electromagnetic interference (EMI) *See* See EMI
electrostatic bag, for storing components....255
electrostatic discharge, preventing....255
elements, J-Web....87
EMC (electromagnetic compatibility)
compliance with requirements....288
preventing problems with....110
standards....287
EMI (electromagnetic interference)
compliance with requirements....288
standards....287
suppressing....110
encrypted access
through HTTPS....155
through SSH....138
through SSL....155
environment, CLI
displaying....100
setting....100
environmental requirements for operation....108
ePIMs
4-Port Fast Ethernet....62
Copper Gigabit Ethernet....52
SFP Gigabit Ethernet....52
slot locations....33
EPROM....18, 31
ESD (electrostatic discharge), preventing....255
ESD wrist strap
verifying resistance, for safety....255
wearing during installation....27
Ethernet cable
chassis console DB-9 connector pinouts....239
chassis console, RJ-45 connector pinouts....238
connecting the Services Router to a management device....139, 141
connecting the Services Router to a modem....144
replacing....176
TGM550 console DB-9 connector pinouts....244
TGM550 console, RJ-45 connector pinouts....244
Ethernet ports *See* Fast Ethernet ports *See* Gigabit Ethernet ports
ETR LED....74
European Union, compliance statement....290
external compact flash *See* compact flash

F

factory configuration, resetting with RESCUE CONFIG button....22, 35
failures
compact flash, USB for....24, 36
PIM, troubleshooting....214
Routing Engine fan, troubleshooting....214
fans
description....25, 38
See also air filter
See also cooling system
failure, troubleshooting....214
Fast Ethernet ports
4-Port Fast Ethernet ePIM....62
ACTIVITY status (dual-port PIM)....61
Dual-Port Fast Ethernet PIM....61
LED states (4-port ePIM)....63
LED states (dual-port PIM)....61
link activity (4-port ePIM)....63
link status (4-port ePIM)....63
LINK/ SPEED status (dual-port PIM)....61
RJ-45 connector pinout....237
FCC Part 15 compliance statement....292
FCC Part 68 compliance statement....292
feature licenses *See* licenses
feature overview....7
field-replaceable units, replacing....175
filter cover *See* air filter
filter, air *See* air filter
fire extinguishers
prohibited....109
required....109
fire safety requirements....108
fire suppression
equipment required....109
shutdown requirement....108
font conventions....xvii
forwarding software process....40
FPC, PIM slot number in command displays....180, 217
front panel....19, 32
FRUs (field-replaceable units), replacing....175
fwdd process....40

G

G.SHDSL PIM
description....66
PIM ONLINE LED....67
G.SHDSL ports *See* SHDSL ports
Gateway Module *See* TGM550
gateway, default....136
ge-0/0/0
connecting through J-Web....139
defining address (configuration editor)....152
defining address (Quick Configuration)....148

for autoinstallation....137
management interface....137
Gigabit Ethernet ePIMs
alarms....54
description....52
high-speed slot locations....54
installation....54
LEDs....54
limitations....54
link speeds and transmission modes 53
SFP, optical interface support....54
Gigabit Ethernet ports
built-in....23, 35
copper....52
LED states....23, 35, 52, 54
port 0....137
RJ-45 connector pinouts (ePIM)....238
RJ-45 connector pinouts (uPIMs)....237
SFP (optical)....51, 53
Gigabit Ethernet uPIMs
alarms....52
description....49
installation....51
LEDs....52
limitations....51
link speeds and transmission modes 51
SFP, optical interface support....52
glossary
basic connectivity....133
PIMs....44
secure Web access....155
graceful shutdown....131
graphical user interface *See* J-Web interface
grounding
Avaya VoIP 10 AWG replacement cable....67
cable....125
chassis....125
DC power requirements and warning....261
equipment warning....265
grounding lug
connecting....127, 129
group licenses....166
GUI *See* J-Web interface

H

HA (high availability) LED....22, 35
hardware
alarm conditions and remedies....213
Avaya VoIP module overview....67
installation and connection....119
maintenance....175
PIM overview....43
product overview....3
replacing components....175
returning....217
troubleshooting components....213
See also LEDs
hardware features
Avaya VoIP modules....67
components....30
front panel....19, 32
PIMs....43
product overview....3
Hayes-compatible modem *See* modem connection to router console port
heat dissipation, PIMs
managing....114
troubleshooting....214
help apropos command....100
Help icon (?)....89, 92
help reference command....100
help topic command....100
Help, J-Web interface....87, 92
Help, JUNOS CLI....100
high availability (HA) LED....22, 35
high-speed interfaces *See* ePIMs
high-speed slots for ePIMs, location....33
hostname....134
defining (configuration editor)....150
defining (Quick Configuration)....147
overview....134
See also DNS server
how to use this guide....xvi
HTTP (Hypertext Transfer Protocol)
enabling Web access (configuration editor)....160
enabling Web access (Quick Configuration)....157
on built-in management interfaces....156
verifying configuration....161
HTTPS (Hypertext Transfer Protocol over SSL)
enabling secure access (configuration editor)....160
enabling secure access (Quick Configuration)....157
Quick Configuration....157
recommended for secure access....156
verifying secure access configuration....161
humidity requirement....108
Hyperterminal, for terminal emulation
local CLI connection....141
modem connection at router for remote CLI access....144
modem connection for remote CLI access....145
Hypertext Transfer Protocol *See* HTTP
Hypertext Transfer Protocol over SSL *See* HTTPS

I

IBM networking *See* DLSw
idle time, setting for a CLI session....101
ifd process....40

IG550 Integrated Gateway *See* Avaya VoIP modules
immunity standards....287
initial configuration requirements....138
injury, steps to take....266
installation
AC power supplies (J6350)....197
air filter....210
compact flash....182, 185
console port cable (chassis)....176
Crypto Accelerator Module....204, 207
DC power supplies (J6350)....200
DRAM modules....194
initial....119
licenses (CLI)....167
licenses (J-Web)....166
PIM cables....179
PIMs....178
preparation....105
requirements....119
restricted access, J2350....121
restricted access, J4350 and J6350....25, 37, 38, 122
safety guidelines and warnings....270
site checklist....117
site guidelines....105
USB storage device....191
Integrated Services Digital Network *See* ISDN
interface software process....40
interfaces
J2320 overview....4
J2320 types supported....46
J2350 overview....5
J2350 types supported....46
J4350 overview....6
J4350 types supported....47
J6350 overview....7
J6350 types supported....47
Internet Explorer, modifying for worldwide version of JUNOS software....85
ISDN BRI ports
BRI S/T....63
BRI U....63
for TIM521 *See* TIM521
LED states....64
provisioning....117
RJ-45 connector pinouts....243
ISDN PRI PIM....57
ISDN provisioning....117
See also ISDN BRI ports

J

J-Flow license....164
J-series
Avaya VoIP modules....67
establishing secure Web access....155
establishing software connectivity....133
feature summary....7
hardware....13
hardware replacement....175
hardware return....217
HTTPS Web access....155
installation and connection....119
JUNOS software overview....39
licenses....163
models available....3
network cables and connectors....227
PIMs....43
release notes, URL....xv
safety and compliance....251
site preparation....105
SSL access....155
user interfaces *See* user interfaces
J-Web configuration editor
basic settings....149
configuration hierarchy display....90
initial configuration....149
secure access....160
J-Web interface
configuration editor *See* J-Web configuration editor
connecting....139
context-sensitive help....87, 99
Help (?) icon....89
Internet Explorer, modifying for worldwide version of JUNOS software....85
layout....87
main pane....88
managing licenses....165
overview....83
page layout....86
Quick Configuration *See* Quick Configuration
regaining lost DHCP lease after initial configuration....147
sessions....93
side pane....89
starting....85
top pane....87
windows, multiple, unpredictable results with....93
J-Web Quick Configuration *See* Quick Configuration
J2320
Avaya VoIP modules....67
boot devices....19
boot sequence....19
chassis....14
chassis cover, replacing....180
compact flash location....183
compact flash, replacing....183
cooling system....25
electrical specifications....111
external compact flash....24
fans....25

front panel....19
hardware....13, 26
installation....121
interfaces supported....46
mounting brackets....121
overview....4
physical specifications....17
PIMs supported....46
ports supported....46
power management....114
Routing Engine, hardware....18
TGM550....70
TIM508....74
TIM510....75
TIM514....77
TIM516....78
TIM518....79
TIM521....81
USB port....24
J2350
air filter, replacing....209
Avaya VoIP modules....67
boot devices....19
boot sequence....19
chassis....14
chassis cover, replacing....180
compact flash location....183
compact flash, replacing....183
cooling system....25
electrical specifications....111
external compact flash....24
fans....25
front panel....19
hardware....13, 26
installation....121
interfaces supported....46
mounting brackets....121
overview....4
physical specifications....17
PIMs supported....46
ports supported....46
power management....114
power system....24
restricted access installation....121
Routing Engine, hardware....18
TGM550....70
TIM508....74
TIM510....75
TIM514....77
TIM516....78
TIM518....79
TIM521....81
USB port....24
J4350
4-Port Fast Ethernet ePIM....62
4-Port ISDN BRI S/T PIM....63
4-Port ISDN BRI U PIM....63
ADSL PIM....64
air filter, replacing....210
Avaya VoIP modules....67
boot devices....31
boot sequence....31
chassis....27
cooling system....38
Dual-Port Channelized T1/E1/ISDN PRI PIM....57
Dual-Port E1 PIM....56
Dual-Port Fast Ethernet PIM....61
Dual-Port Serial PIM....55
Dual-Port T1 PIM....56
electrical specifications....111
fans....38
front panel....32
FRUs, replacing....175
G.SHDSL PIM....66
Gigabit Ethernet ePIM....52
Gigabit Ethernet uPIMs....49
hardware....26
hardware components....30
hardware, replacing....175
installation....122
interfaces supported....47
mounting brackets, installing....123
overview....5
physical specifications....30
PIM overview....46
PIMs supported....47
ports supported....47
power management....114
power system....36
restricted access installation....25, 37, 38, 122
Routing Engine, hardware....31
TGM550....70
TIM508....74
TIM510....75
TIM514....77
TIM516....78
TIM518....79
TIM521....81
USB port....36
J6350
4-Port Fast Ethernet ePIM....62
4-Port ISDN BRI S/T PIM....63
4-Port ISDN BRI U PIM....63
ADSL PIM....64
air filter, replacing....210
Avaya VoIP modules....67
boot devices....19, 31
boot sequence....31
chassis....27
cooling system....38
Dual-Port Channelized T1/E1/ISDN PRI PIM....57
Dual-Port E1 PIM....56

Dual-Port Fast Ethernet PIM....61
Dual-Port Serial PIM....55
Dual-Port T1 PIM....56
E3 PIM....59
electrical specifications....111
fans....38
front panel....32
FRUs, replacing....175
G.SHDSL PIM....66
Gigabit Ethernet ePIM....52
Gigabit Ethernet uPIMs....49
hardware....26
hardware components....30
hardware, replacing....175
installation....122
interfaces supported....47
mounting brackets, installing....123
overview....6
physical specifications....30
PIM overview....46
PIMs supported....47
ports supported....47
power management....114
power supplies *See* power supplies, J6350
restricted access installation....25, 37, 38, 122
Routing Engine, hardware....31
T3 PIM....59
TGM550....70
TIM508....74
TIM510....75
TIM514....77
TIM516....78
TIM518....79
TIM521....81
USB port....36
Japan, compliance statement....291
JTAC (Juniper Networks Technical Assistance Center)
contacting....216
contacting for hardware return....220
information required for hardware return....221
Juniper Networks Technical Assistance Center *See* JTAC
JUNOS CLI
CLI terminal....95
command completion....98
command hierarchy....94
command modes....84
command prompts *See* command prompts
connecting locally....141
connecting remotely....143
console....95
context-sensitive help....99
editing keystrokes....97
environment, changing....100
idle time....101
managing licenses....167
overview....84
screen length....101
screen width....102
ssh....95
starting....95
telnet....95
terminal type....102
working directory....101
JUNOS Internet software
release notes, URL....xv
JUNOS software
establishing connectivity....133
establishing secure Web access....155
Internet Explorer, modifying for worldwide version....85
licenses....163
overview....39
Packet Forwarding Engine....40
processes....40
Routing Engine....40
worldwide version, modifying Internet Explorer for....85
JUNOScope application....42
JUNOScript API
defining access (Quick Configuration)....148
enabling secure access....157
management access....138
verifying secure access configuration....161
JUNOScript over SSL....157

K

kernel....40
key sequences, editing, in CLI....97

L

labels, serial number....217, 218
laptop *See* management device
lasers
beam warning....278
Class 1 product warning....277
open aperture warning....279
safety guidelines....276
layout, J-Web....87
leaf statements....97
LEDs
ACT (TGM550 active)....74
ACT (TIM508 active)....75
ACT (TIM510 active)....76
ACT (TIM514 active)....78
ACT (TIM516 active)....79
ACT (TIM518 active)....80
ACT (TIM521 active)....82
ACTIVITY status (dual-port PIM)....61
ADSL PIM status....65
ADSL port status....65

ALARM....21, 34
ALM (TGM550 alarm)....74
ALM (TIM508 alarm)....75
ALM (TIM510 alarm)....76
ALM (TIM514 alarm)....78
ALM (TIM516 alarm)....79
ALM (TIM518 alarm)....80
ALM (TIM521 alarm)....82
ASB (alternate software bank)....74
channelized E1 ports....59
channelized T1 ports....59
Class 1 product warning....277
E1 port status....57
E3 port status....60
ETR (emergency transfer relay)....74
Fast Ethernet port status (4-port ePIM)....63
Fast Ethernet port status (dual-port PIM)....61
G.SHDSL PIM status....67
Gigabit Ethernet port status....23, 35, 54
HA....22, 35
ISDN PIM status....64
ISDN port status....64
J4350 power supply....37
J6350 power supply....37
LAN port status....23, 35
LINK....23, 35, 54
link activity (4-Port Fast Ethernet ePIM)....63
link status (4-port ePIM)....63
LINK/ SPEED status (Dual-Port Fast Ethernet PIM)....61
ONLINE status (ADSL PIM)....65
ONLINE status (G.SHDSL PIM)....67
ONLINE status (ISDN BRI PIMs)....64
POWER....20, 33
safety warnings....276
serial port status....56
SHDSL port status....67
SIG (signal)....76
STATUS (router)....21, 34
T1 port status....57
T3 port status....60
TGM550 port status....74
TIM508 link status....75
TIM510 link status....76
TIM514 link status....78
TIM516 link status....79
TIM518 link status....80
TIM521 link status....82
TST (test)....76
TX/RX....23, 35, 54
license infringement
identifying any licenses needed....166
verifying license usage....170
verifying licenses installed....169
license keys
components....164
displaying (CLI)....170
displaying (J-Web)....167
status....166
version....166
licenses
adding (CLI)....167
adding (J-Web)....166
BGP route reflectors....164
deleting (CLI)....168
deleting (J-Web)....167
displaying (CLI)....169
displaying (J-Web)....165
displaying usage....170
DLSw....164
downloading (J-Web)....167
features requiring a license....7
group....166
infringement, preventing....165
See also license infringement
installed....166
J-Flow traffic analysis....164
JUNOS software....163
key....164
See also license keys
managing (CLI)....167
managing (J-Web)....165
overview....163
preparation for....164
saving (CLI)....168
traffic analysis....164
verifying....169
Licenses page....165
lifting guidelines....271
lightening activity warning....283
LINE and TRUNK ports, on Avaya VoIP TGM550....70
LINE ports, TIM514....77
link activity LED (4-Port Fast Ethernet ePIM)....63
LINK LED....23, 35, 54
link status LED (4-Port Fast Ethernet ePIM)....63
LINK/ SPEED LED (Dual-Port Fast Ethernet PIM)....61
lithium battery compliance....288
lo0.0....136
local connection to the router console port....141
loopback address
defining (configuration editor)....151
defining (Quick Configuration)....148
overview....136
LX transceiver
Gigabit Ethernet ePIM....54
Gigabit Ethernet uPIM....52

M

main pane, J-Web....88

maintenance
AC power cord, replacing....195
air filter....210
console port cable (chassis)....176
Crypto Accelerator Module....202, 205
DC power cable, replacing....198
DRAM modules....192
external compact flash....188
internal compact flash....182, 185
PIM cables....179
PIMs....176
power system....195
tools and parts required....175
USB storage device....190
warnings....280
major (red) alarms
PIMs....214
Routing Engine....214
management access....137
management device
connecting through the CLI....143
connecting to J-Web....139, 141
management interface address
after initial configuration....137
before initial configuration....137
defining (configuration editor)....152
defining (Quick Configuration)....148
during initial configuration....137
loopback....136
management interfaces....137
management ports....23, 35
See also management interface address; management interfaces
management software process....40
manuals
comments on....xxi
memory *See* compact flash; DRAM modules; USB
mgd process....40
microkernel....40
midplane....18, 31
minor (yellow) alarms
alternative boot device....213
internal compact flash....213
Routing Engine....214
modem commands
at remote end....145
at router end....144
modem connection to router console port
configuring modem at router end....143
configuring modem at user end....145
connecting modem to router....144
overview....143
monoammonium phosphate....109
mounting brackets
installing on J4350 and J6350....125
on J2320 and J2350....121
multiple routers
safe rack order....121, 123

N

NEBS (Network Equipment Building System)
identifying NEBS-compliant routers....38
shutdown temperature for NEBS-compliant routers....25, 38
network cable pinouts....227
Network Equipment Building System *See* NEBS
Network Time Protocol (NTP) server *See* NTP server
notice icons....xvii
NT1 device, provisioning information....117
NTP server
defining (configuration editor)....151
defining (Quick Configuration)....147
overview....135
requirement for Common Criteria environments....135

O

OK button
J-Web configuration editor....91
Quick Configuration....91
ONLINE LEDs
ADSL PIM status....65
channelized E1 ports....59
channelized T1 ports....59
G.SHDSL PIM status....67
ISDN BRI PIM status....64
openssl command....157
operating system *See* JUNOS software
operational mode
commands....95
prompt (>)....95
overview
J2320....4
J2350....4
J4350....5
J6350....6

P

Packet Forwarding Engine....40
microkernel....40
packing materials
packing a Services Router for shipment....222
packing components for shipment....223
saving....120
pages, layout in J-Web....86
parentheses, in syntax descriptions....xviii
password *See* root password
PC *See* management device
personnel warning....254

PIC *See* PIMs
PIM number, always 0.....180
PIMs (Physical Interface Modules)
4-Port Fast Ethernet.....62
4-Port ISDN BRI.....63
ADSL.....64
Avaya VoIP modules *See* Avaya VoIP modules
cables and connectors.....227
Dual-Port Channelized T1/E1/ISDN PRI PIM.....57
Dual-Port E1.....56
Dual-Port Fast Ethernet.....61
Dual-Port Serial.....55
Dual-Port T1.....56
E3.....59
failure.....214
field-replaceable PIMs.....46
G.SHDSL.....66
Gigabit Ethernet ePIMs.....52
Gigabit Ethernet uPIMs.....49
heat dissipation.....114
installing.....178
installing cables.....179
LEDs *See* LEDs
major (red) alarm.....214
midplane to Routing Engine.....18, 31
non-hot-swappability.....43, 177, 178
offline, troubleshooting.....214
overview.....43
See also Avaya VoIP modules
PIM number, always 0.....180, 217
power consumption.....114
power management, planning.....114
power management, troubleshooting.....214
removing.....176
replacing cables.....179
serial number label.....220
slot numbering, J2320 and J2350.....20
slot numbering, J4350 and J6350.....33
T3.....59
pinouts
ADSL RJ-11 connector.....242
Avaya VoIP modules.....243
chassis console DB-9 connector.....239
chassis console port.....238
EIA-530A DCE serial cable.....233
EIA-530A DTE serial cable.....232
Fast Ethernet connector.....237
Gigabit Ethernet connector (ePIM).....238
Gigabit Ethernet connector (uPIMs).....237
ISDN RJ-45 connector.....243
RJ-45 chassis console connector.....238
RJ-45 TGM550 console connector.....244
RJ-48 connector to DB-15 connector (crossover).....241
RJ-48 connector to DB-15 connector (straight).....241
RJ-48 connector to RJ-48 connector (crossover).....240
RJ-48 connector to RJ-48 connector (straight).....240
RS-232 DCE serial cable.....229
RS-232 DTE serial cable.....228
RS-422/449 (EIA-449) DCE serial cable.....231
RS-422/449 (EIA-449) DTE serial cable.....229
SHDSL RJ-11 connector.....242
TGM550 analog RJ-11 connector.....244
TGM550 console DB-9 connector.....244
TGM550 console port.....244
TIM508.....245
TIM510 E1/T1 RJ-45.....245
TIM514 analog RJ-11 connector.....246
TIM516.....246
TIM518.....248
TIM521 ISDN BRI ports.....249
V.35 DCE serial cable.....235
V.35 DTE serial cable.....234
X.21 DCE serial cable.....236
X.21 DTE serial cable.....235
plug types, AC.....112
ports
0.....137
ADSL *See* ADSL ports
AUX.....23, 36
cables, PIM, installing.....179
cables, WAN, removing.....179
channelized *See* channelized E1 ports; channelized T1 ports
console (chassis).....23, 36
See also console port
console (TGM550).....70
DS1 *See* E1 ports; T1 ports
DS3 *See* E3 ports; T3 ports
E1 *See* E1 ports
E3 *See* E3 ports
G.SHDSL *See* SHDSL ports
interface naming.....180
ISDN *See* ISDN BRI ports
J2320 types supported.....46
J2350 types supported.....46
J4350 types supported.....47
J6350 types supported.....47
LINE and TRUNK, on Avaya VoIP TGM550.....70
lo0.0.....136
serial *See* serial ports
SHDSL *See* SHDSL ports
T1 *See* T1 ports
T3 *See* T3 ports
telephone and trunk, on Avaya VoIP TGM550.....70
TGM550.....70
TIM510.....75
TIM514.....77

TIM521....81
USB....24, 36
power
AC power *See* AC power
applying....131
button....20, 33
connecting....126
consumption, PIMs....114
DC power *See* DC power
grounding requirement....125
LED....20, 33
managing....114
power cables *See* DC power cables
power cords *See* AC power cords
power supplies *See* power supplies
power system *See* power system
removing....131
requirements....111
troubleshooting....214
power button....20, 33
power cables *See* DC power cables
power cords *See* AC power cords
POWER LED....20, 33
power management
planning....114
troubleshooting....214
power supplies
J2320....24
J2350....24
J4350....36
J6350 *See* power supplies, J6350
LED states....37
power supplies, J6350
blank panel required in empty slot....195
dedicated AC power feed requirement....198
dedicated DC power feed requirement....201
description....37
installing AC....197
installing DC....200
LED states....37
redundancy....37
removing AC....196
removing DC....199
serial number label....220
power system
connecting....127, 128
fan....25, 38
J2320....24
J4350....36
J6350....37
power supply LED....37
preparing for installation....105
processes, software
chassis process....40
forwarding process....40
interface process....40
management process....40
routing protocol process....40
product disposal....286
product overview....3
prompt *See* command prompts; restart-after-upgrade prompt
provisioning an ISDN line....117

Q

Quick Configuration
basic settings....145
buttons....91
initial configuration....145
Secure Access page....158
secure Web access....157
Set Up page....147

R

rack installation
general requirements....106
lifting guidelines....271
mounting brackets....125
order of multiple routers....121, 123
procedure....121, 122
safety guidelines and warnings....272
securing rack to building....107
size requirements....106, 107
support for front-mount rack....106, 107
ventilation requirement....106, 107
radio frequency interference (RFI), reducing....110
ramp angle requirement....276
read or write error, Routing Engine....214
red alarms *See* major alarms
red asterisk (*)....89
redundant J6350 power supplies
description....37
safety guidelines for power sources....260
regulatory compliance....251
release notes, URL....xv
remote connection to router console port
configuring modem at router end....143
configuring modem at user end....145
connecting modem to router....144
overview....143
replacement
AC power cord....195
air filter....210
console port cable (chassis)....176
Crypto Accelerator Module....202, 205
DC power cable....198
DRAM modules....192
external compact flash....188
internal compact flash....182, 185
PIM cables....179

PIMs....176
power system (J6350)....195
tools and parts required....175
USB storage device....190
request chassis pic fpc-slot command....179
request system license add command....168
request system license add terminal command....168
request system license delete command....168
request system license save command....168
required entry 89
rescue configuration, resetting with RESCUE CONFIG button....22, 35
reset
power button for restart....20, 33
RESET CONFIG button for factory configuration....22, 35
RESET CONFIG button
for factory configuration....22, 35
for rescue configuration....22, 35
restart-after-upgrade prompt....101
Return Materials Authorization *See* RMA
returning hardware....217
packing a Services Router for shipment....222
packing components for shipment....223
procedure....221
tools and parts required....222
RJ-11 connector pinouts
TGM550 analog ports....244
TIM514 analog ports....246
RJ-45 connector pinouts
chassis console port....238
Fast Ethernet port....237
Gigabit Ethernet port (ePIM)....238
Gigabit Ethernet port (uPIMs)....237
TGM550 console port....244
TIM510 E1/T1 ports....245
TIM521 ISDN BRI ports....249
RJ-45 to DB-9 serial port adapter
chassis console port....141, 144
TGM550 console port....71
RJ-48 connector to DB-15 connector (crossover) pinouts....241
RJ-48 connector to DB-15 connector (straight) pinouts....241
RJ-48 connector to RJ-48 connector (crossover) pinouts....240
RJ-48 connector to RJ-48 connector (straight) pinouts....240
RMA (Return Materials Authorization)....217
number....221
packing a Services Router for shipment....222
packing components for shipment....223
procedure....221
tools and parts required....222
root password
at initial local connection (none)....142
at initial remote connection (none)....145
characteristics....135
Common Criteria limitations....135
defining (configuration editor)....150
defining (Quick Configuration)....147
required to commit a configuration....135
route reflectors, BGP, license....164
router *See* Services Router
Routing Engine
fan....25, 38
fan failure....214
J2320 functions and components....18
J2350 functions and components....18
J4350 functions and components....31
J6350 functions and components....31
kernel....40
major (red) alarm....214
midplane to PIMs....18, 31
minor (yellow) alarm....214
read or write error....214
software component....40
too warm....214
routing protocol software process....40
rpd process....40
RS-232 DCE cable pinouts....229
RS-232 DTE cable pinouts....228
RS-422/449 (EIA-449) DCE cable pinouts....231
RS-422/449 (EIA-449) DTE cable pinouts....229

S

S/T port *See* ISDN BRI ports
safety guidelines and warnings
AC power....258
battery handling....280
DC power (general)....259
DC power disconnection....260
DC power wiring sequence warning....262
DC power wiring terminations warning....264
DC power, grounding requirements and warning....261
DC power, redundant power supplies....260
electrical....256
general....253
grounded equipment....265
in case of electrical accident....266
installation....270
jewelry removal....282
lasers and LEDs....276
levels....251
lightening activity....283
maintenance and operation....280
multiple power supplies 266
operating temperature....284

power disconnection....267
product disposal....286
rack-mounting....272
ramps....276
read installation instructions....271
telecommunications cord....269
TN power system....268
safety standards....287
fire safety....108
sample configuration
for basic connectivity....152
for secure access....162
for SSL certificates....161
saving licenses (CLI)....168
screen length, CLI, setting 101
screen width, CLI, setting 102
secure access
generating SSL certificates....157
HTTPS access (configuration editor)....160
HTTPS access (Quick Configuration)....157
HTTPS recommended....156
installing SSL certificates (configuration editor)....160
installing SSL certificates (Quick Configuration)....157
JUNOScript SSL access....157
overview....156
requirements....156
sample configuration....162
verifying secure access configuration....161
Secure Access page
description....158
field summary....159
Secure Sockets Layer *See* SSL
serial number
chassis components, label....217, 218
PIMs....220
power supply....220
serial ports
cables and connectors....227
Dual-Port Serial PIM....55
EIA-530A DCE pinouts....233
EIA-530A DTE pinouts....232
LED states....56
RS-232 DCE pinouts....229
RS-232 DTE pinouts....228
RS-422/449 (EIA-449) DCE pinouts....231
RS-422/449 (EIA-449) DTE pinouts....229
V.35 DCE pinouts....235
V.35 DTE pinouts....234
X.21 DCE pinouts....236
X.21 DTE pinouts....235
service provider, contacting for ISDN provisioning....117
Services Router
Avaya VoIP module overview....67
backup....136
clearance....105
connecting....139
establishing secure Web access....155
establishing software connectivity....133
grounding a DC-powered model....129
grounding an AC-powered model....126
hardware....13
hardware replacement....175
hardware return....217
HTTPS Web access....155
installation and connection....119
licenses....163
network cables and connectors....227
operating environment....108
overview....3, 7
packing for shipment....222
PIM overview....43
powering on and off....131
preparation checklist....117
safety and compliance....251
site preparation....105
software....39
SSL access....155
unpacking....120
user interfaces *See* user interfaces
sessions, J-Web....93
set cli commands....100
Set Up page
description....145
field summary....147
setup
configuration editor....149
Quick Configuration....145
requirements....138
SFP Gigabit Ethernet ePIMs
optical interface support....54
overview....52
SFPs supported....53
SFP Gigabit Ethernet uPIMs
optical interface support....52
overview....49
SHDSL ports
description....66
LED states on a G.SHDSL PIM....67
RJ-11 connector pinouts....242
shipping carton
packing a Services Router for shipment....222
packing components for shipment....223
saving....120
show chassis alarms command....213
show chassis fpc pic-status command....180

show chassis hardware command
identifying NEBS-compliant routers....38
locating component serial numbers....217
verifying Crypto Accelerator Module installation....205, 208
show chassis power-ratings command....215
show chassis routing-engine command
checking CPU temperature....25, 38
checking DRAM amount....18, 31
verifying DRAM installation and configuration....195
show cli command....100
show system license command....169
explanation....169
show system license keys command....170
show system license usage command....170
explanation....170
shutdown
graceful....131
immediate....131
temperature *See* shutdown temperature
shutdown temperature
NEBS-compliant routers....25, 38
non-NEBS-compliant routers....38
side pane, J-Web....89
SIG LED....76
signaling limitations....110
site preparation
checklist....117
electrical wiring guidelines....110
fire safety....108
for rack installation....106
guidelines....105
operating environment....108
power requirements....111
size
J2320....17
J2350....17
J4350....30
J6350....30
requirements for rack installation....106, 107
slot numbers, PIM
chassis diagram....20, 33
displayed as FPC number in command output....180
small form-factor pluggable transceivers *See* SFP
SNMP (Simple Network Management Protocol), no Gigabit Ethernet support....51, 54
software....39
features....39
licenses *See* licenses
See also JUNOS software
specifications
AC electrical connection....111
AC power cords....112
DC electrical connection....113
DC power cables....113
electrical....111
environmental....108
grounding cable....125
J2320 hardware....17
J2350 hardware....17
J4350 hardware....30
J6350 hardware....30
serial PIM cables and connectors....227
SFP Gigabit Ethernet ePIM....54
SFP Gigabit Ethernet uPIMs....52
SRC application....42
SSH
defining (configuration editor)....150
defining access (Quick Configuration)....148
management access....138
SSL (Secure Sockets Layer)
enabling secure access (Quick Configuration)....157
management access....156
verifying SSL configuration....161
SSL 3.0 option, disabling on Internet Explorer for worldwide version of JUNOS software....85
SSL certificates
adding (configuration editor)....161
adding (Quick Configuration)....159
generating....157
sample configuration....161
verifying SSL configuration....161
standards compliance....287
startup
J-Web interface....85
JUNOS CLI....95
Services Router....131
standby power....131
statements, configuration types....97
status
license key....166
router....21, 34
See also STATUS LEDs
STATUS LEDs
ADSL ports....65
channelized E1 ports....59
channelized T1 ports....59
E1 ports....57
E3 ports....60
ISDN ports....64
router status....21, 34
serial ports....56
SHDSL ports....67
T1 ports....57
T3 ports....60
storage media
replacing the external compact flash....188
replacing the internal compact flash....182, 185
replacing the USB storage device....190

support, technical *See* technical support
SX transceiver
Gigabit Ethernet ePIM....54
Gigabit Ethernet uPIM....52
symmetric high-speed digital subscriber line *See* SHDSL
syntax conventions....xvii
system overview
hardware....13
software....39
system time
defining (Quick Configuration)....148
overview....135
synchronizing (configuration editor)....151
synchronizing (Quick Configuration)....147

T

T1 ports
description....56
See also channelized T1 ports
LED states....57
RJ-48 cable pinouts....239
T1 trunk ports, TIM510
description....75
pinouts....245
T1/E1 media module *See* TIM508 *See* TIM510 *See* TIM516 *See* TIM518
T3 ports
BNC connector pinouts....242
description....59
LED states....60
taskbar....88
technical support
contacting JTAC....xxi
contacting JTAC for hardware return....220
information required for hardware return....221
telecommunications line wire gauge....269
telephone and trunk ports, on Avaya VoIP TGM550....70
Telephony Gateway Module *See* TGM550
Telephony Interface Modules *See* TIM508; TIM510; TIM514; TIM516; TIM518; TIM521
Telnet
defining access (Quick Configuration)....148
management access....137
temperature
required for operation....108
Routing Engine, too warm....214
shutdown, NEBS-compliant routers....25, 38
shutdown, non-NEBS-compliant routers....38
warning....284
temperature alarm, air filter replacement for....210
terminal type, setting 102
terminology
basic connectivity....133
PIMs....44
secure Web access....155
TGM550
analog port pinouts....244
console port pinouts....244
description....70
maximum gateway capacities....72
port LED states....74
ports....70
thermal output....108
TIM508
connector port pinouts....245
description....74
port configurations....74
ports, LED states....75
TIM510
description....75
E1 trunk ports....75
ports, LED states....76
RJ-45 connector port pinouts....245
T1 trunk ports....75
TIM514
analog port pinouts....246
analog telephone ports....77
analog trunk ports....77
description....77
port configurations....77
ports, LED states....78
TIM516
connector port pinouts....246
description....78
port configurations....78
ports, LED states....79
TIM518
connector port pinouts....248
description....79
port configurations....80
ports, LED states....80
TIM521
description....81
ISDN BRI connector port pinouts....249
ISDN BRI ports....81
ports, LED states....82
RJ-45 connector port pinouts....249
time *See* system time
time zone....135
defining (configuration editor)....150
defining (Quick Configuration)....147
TIMs *See* TIM508; TIM510; TIM514; TIM516; TIM518; TIM521
TN power system....268
tolerances, environmental....108

tools and equipment
for component replacement....175
for hardware return....222
top pane, J-Web....87
traffic analysis license....164
troubleshooting a Services Router, hardware components
chassis alarm conditions....213
offline PIMs....214
power management....214
TRUNK and LINE ports, on Avaya VoIP TGM550....70
trunk ports, TIM508
pinouts....245
TRUNK ports, TIM514....77
trunk ports, TIM516
pinouts....246
trunk ports, TIM518
pinouts....248
TST LED....76
turning on a Services Router....131
TX/RX LED....23, 35, 54
Type C fire extinguishers....109
types of configuration statements....97

U

U port *See* ISDN BRI ports
United States, compliance statements....292
universal serial bus *See* USB
unpacking the router....120
uPIMs, Gigabit Ethernet *See* Gigabit Ethernet uPIMs
URLs
datasheets....43
PIM information and datasheets....43
release notes....xv
return and repair policies....221
support....216
USB (universal serial bus)
storage device, installing....191
storage device, removing....190
storage device, replacing....190
USB port....24, 36
user interfaces
J-Web graphical user interface (GUI)....41
See also J-Web interface
JUNOS command-line interface (CLI)....41
See also JUNOS CLI
JUNOScope application....42
overview....83
preparation....85
SRC application....42

V

V.35 DCE cable pinouts....235
V.35 DTE cable pinouts....234
ventilation requirement....105
verification
active licenses....169
basic connectivity....152
license usage....170
licenses....169
secure access....161
version, license key....166
voice over IP *See* Avaya VoIP modules
VoIP *See* Avaya VoIP modules

W

warnings
battery handling....280
DC power cables....259
DC power disconnection....260
DC power plant and chassis ground....113
DC wiring sequence....262
DC wiring terminations....264
DC-powered J4350, and J6350 routers, restricted access installation only....110
earthed mains socket (Norway and Sweden only)....266
electrical....256
ESD strap to prevent router damage....27
follow lifting guidelines....121, 123
general....253
grounded equipment....265
installation....270
jewelry removal....282
laser and LED....276
levels defined....251
lightening activity....283
maintenance and operational....280
multiple power supply disconnection....266
operating temperature....284
personnel....254
power disconnection....267
product disposal....286
rack-mounting requirements....272
ramp angle....276
read installation instructions....271
restricted access location for DC-powered routers....25, 37, 38, 121, 122
rotating fans, compact flash replacement....183, 186
safe rack order for multiple routers....121, 123
telecommunications lines....269
TN power system....268
Web access, secure *See* secure access
Web browser, modifying Internet Explorer for worldwide version of JUNOS software....85
weight
J2320....17
J2350....17

J4350.....30
J6350.....30
rack-mount requirements.....106, 107
windows, J-Web, unpredictable results with multiple.....93
wire gauge
for grounding cables.....125
for telecommunications lines.....269
wiring guidelines
DC wiring sequence warning.....262
DC wiring terminations warning.....264
radio frequency interference (RFI).....110
signaling limitations.....110
suppressing electromagnetic interference (EMI).....110
working directory, setting.....101

X

X.21 DCE cable pinouts.....236
X.21 DTE cable pinouts.....235